DRG.No.	9	1	0	2	0	0	0	3	1	0	1	7	0	0	0	0	0	D	B
				IC			SS		S		AA		A		C			SST	

GEN.TOL.MEDIUM/~~COARSE/FINE~~ CLASS TO IS:2102	DRAWING CONVENTION CONFORM TO INDIAN STD. DIMNS IN mm UNLESS OTHERWISE STATED.

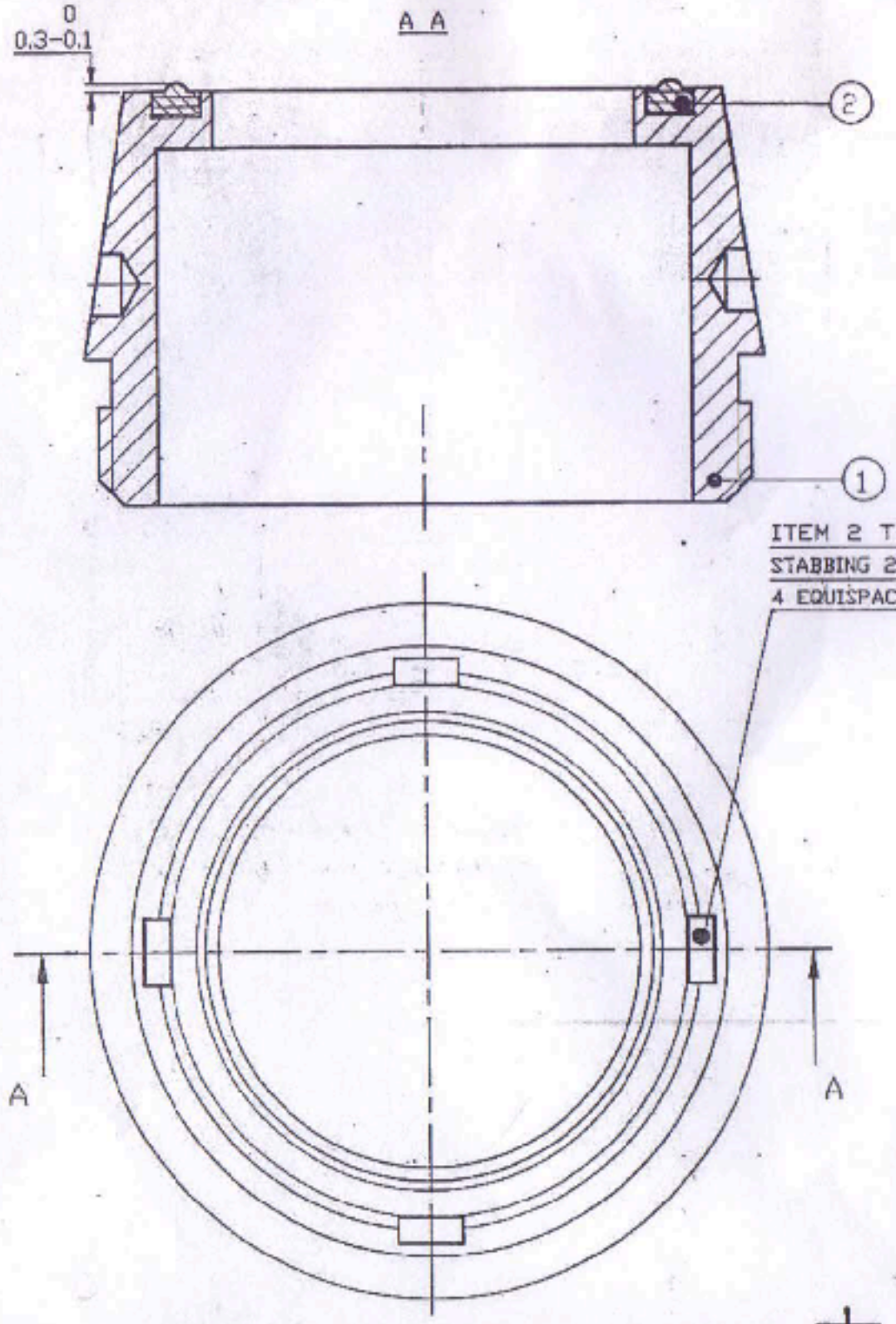

ITEM 2 TO BE FIXED IN A GROOVE BY STABBING 2.5X1X0.5 DEEP AT 4 EQUISPACED PLACES AS SHOWN.

COPY ISSUED BY CDD/OFAJ
यह प्रति सी डी डी/ओ. एफ.ए. जे. द्वार दी गई है।
दिनांक: क.का.प्र./सी.डी.डी
Date: 22-05-2019 JWM/CDD

ITEM LIST

ITEM	QUANTITY	DESCRIPTION	REFERENCE
1	1	BODY UPPER	9102 00 03 10 17 001 00DB
2	1	SEALING WASHER	9102 00 03 10 17 002 00DA

R No.	DATE	AUTHORITY	BRIEF RECORD	ZONE	CD SIGN	GD SIGN
1	15.7.2009		COMPONENTS PRG No. OF Sr. No. 1 CHANGED			

DRN. SABLE
CHD.
APPD.
DATE: 15/6/98 FOR DIRECTOR
SEALED
DATE:
SCALE: 5:1
EST.MASS:
MATERIAL
PROTECTIVE FINISH:
TITLE:
BODY UPPER & SEALING WASHER ASSY.
DESIGN AUTHORITY ARDE

DRG.No. 9102 00 03 10 17 00 0 0DB

PART No. | DS CAT.No. | AHSP

DRG.No.	IC	SS	S	AA	A	C	SST
	9 1 0 2	0 0	0 3	0 0	0 1	0 0 1	0 0 D B

GEN.TOL.MEDIUM/~~COARSE/FINE~~ CLASS TO IS:2102

DRAWING CONVENTION CONFORM TO INDIAN STD. DIMNS IN mm UNLESS OTHERWISE STATED.

COPY ISSUED BY CDD/OFAJ
यह प्रति सी डी डी/ओ. एफ.ए. जे.
द्वारा दी गई है।
दिनांक: क.का.प्र./सी.डी.डी
Date : 22-05-2019 for JWM/CDD

A–A

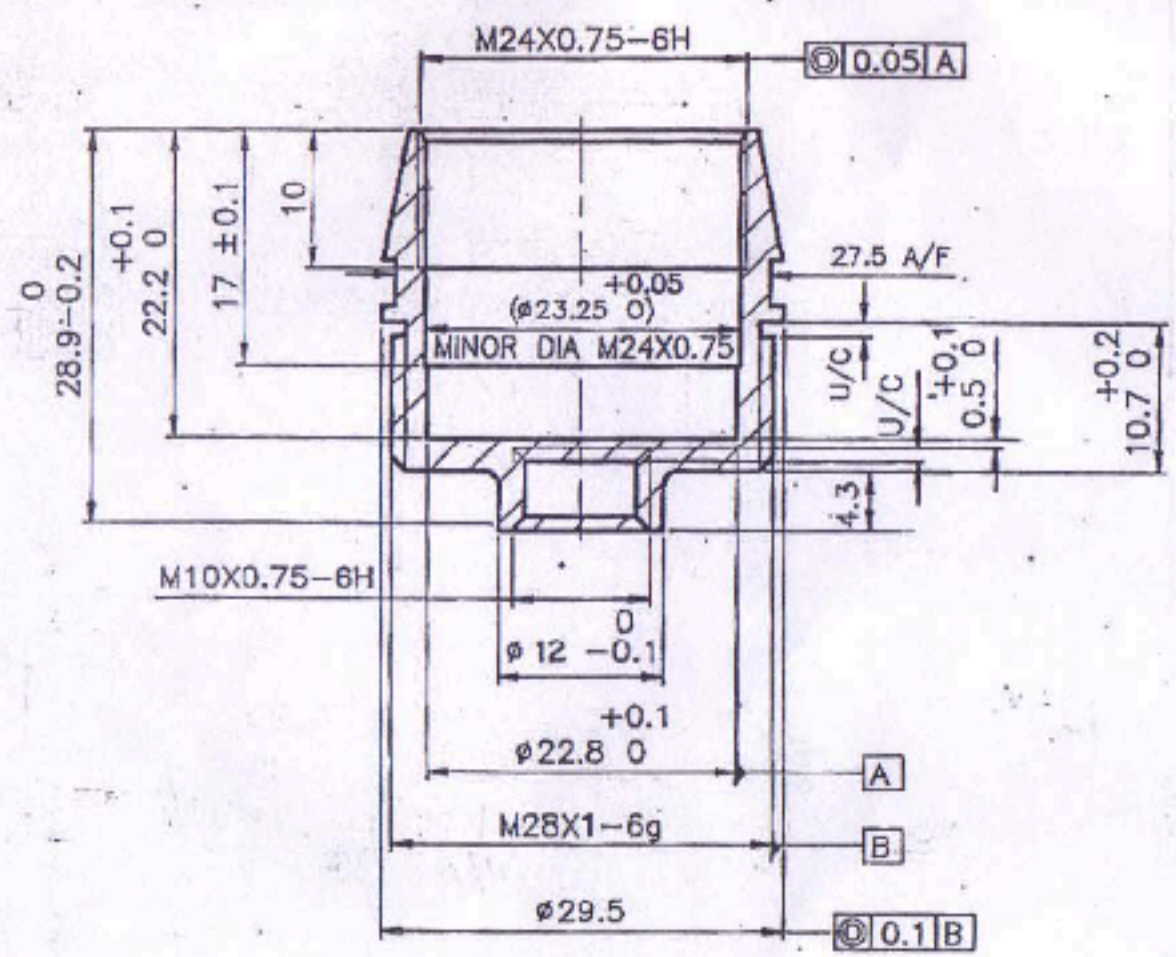

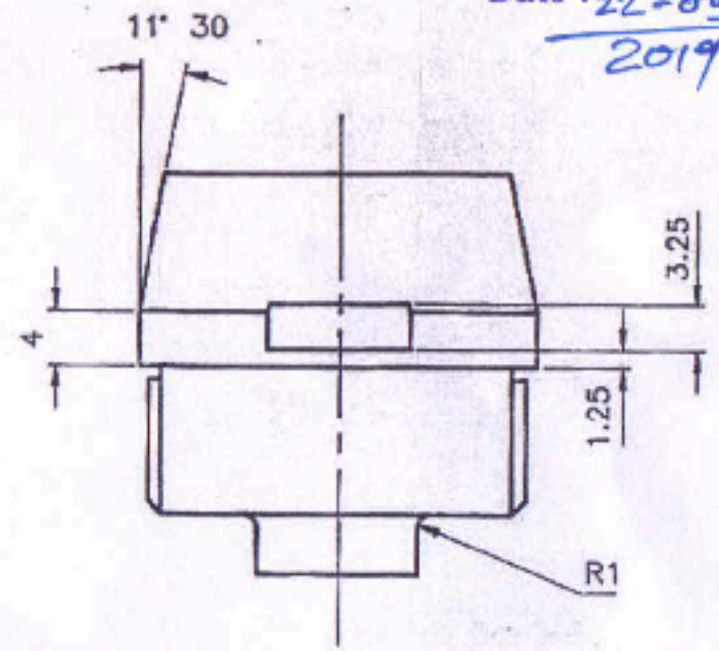

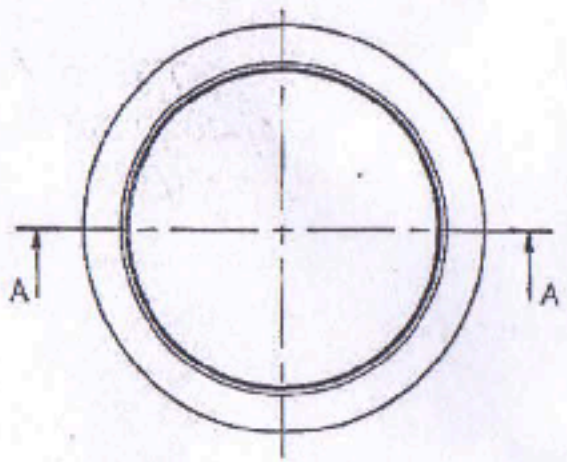

NOTES:
1) DIMNS. APPLY AFTER PLATING.
2) BURRS/SHARP EDGES NOT PERMITTED.

R No.	DATE	AUTHORITY	BRIEF RECORD	ZONE	CD SIGN	GD SIGN
1	5-7-2000		ALTERNATIVE MATL. ADDED			

DRN. SABLE
CHD.
APPD.
DATE 15/6/98 FOR DIRECTOR
SEALED DATE:
SCALE: 2:1
EST.MASS: 14.79 g
DESIGN AUTHORITY ARDE

MATERIAL:
ALUMINIUM TO SPEC. IS:733–1983 24345 W OR WP OR BS:1474 GRADE 2014 A

PROTECTIVE FINISH:
TO BE ANODISED TO SPEC. DEF 151–1966 TYPE 2

TITLE:
BODY LOWER

DRG.No. 9 1 0 2 (IC) 0 0 (SS) 0 3 (S) 0 0 (AA) 0 1 (A) 0 0 1 (C) 0 0 D B (SST)

PART No. | DS CAT.No. | AHSP

DRG.No.	9	1	0	2	0	0	0	3	0	6	1	2	0	0	0	0	0	D	B
		IC			SS		S		AA		A		C				SST		

GEN.TOL.MEDIUM/~~COARSE/FINE~~ CLASS TO IS:2102	DRAWING CONVENTION CONFORM TO INDIAN STD. DIMNS IN mm UNLESS OTHERWISE STATED.

BASED ON HEMRL DRG. No. EROL DRG 1270

COPY ISSUED BY CDD/OFAJ
यह प्रति सी डी डी/ओ. एफ.ए. जे. द्वारा दी गई है।
दिनांक: का.का.अ./सी.डी.डी
Date : 22-05-2019 for JWM/CDD

NOTES:

1) APPLY A THIN COAT OF APC-219, LACQUER NC 'RED' FROM OUTSIDE UP TO HEIGHT OF 7 FROM BOTTOM AND ALLOW TO DRY FOR 1 HOUR AT ROOM TEMP.
2) RH IN THE FILLING SHOP – 55±5%
3) LOOSE COMPOSITION IF ANY SHOULD BE REMOVED BY SMOOTH NYLON BRUSH

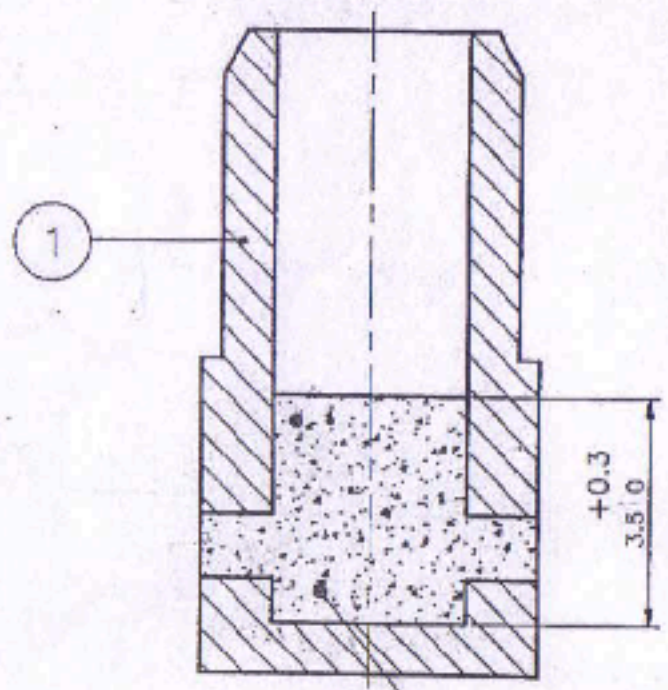

COMPOSITION : ME – 461
PRESSING LOAD : 275 ± 5Kg
CHARGE WT : 65 – 5mg
DWELL TIME : 10 Sec.

ITEM LIST

ITEM	QUANTITY	DESCRIPTION	REFERENCE
1	1	HOUSING SRD	9102 00 03 00 01 005 00DB

R No.	DATE	AUTHORITY	BRIEF RECORD	ZONE	CD	GD
1	5.7.2010		COMPONENTS DRG.No. CHANGED			

SIGN

DRN. SABLE | CHD. | MATERIAL:
APPD. DATE: 15/6/98 | DIRECTOR
SEALED DATE:
PROTECTIVE FINISH
SCALE: 10:1 | EST.MASS:
TITLE: HOUSING SRD (FILLED)
DESIGN AUTHORITY ARDE

DRG.No. 9 1 0 2 (IC) 0 0 (SS) 0 3 (S) 0 6 (AA) 1 2 (A) 0 0 0 (C) 0 0 D B (SST)

PART No. | DS CAT.No. | AHSP

DRG.No.	9102	00	03	01	05	001	00DB
	IC	SS	S	AA	A	C	SST

GEN.TOL.MEDIUM/~~COARSE/FINE~~ CLASS TO IS:2102

DRAWING CONVENTION CONFORM TO INDIAN STD. DIMNS IN mm UNLESS OTHERWISE STATED.

COPY ISSUED BY CDD/OFAJ
यह प्रति सी डी डी/ओ. एफ.ए. जे.
द्वारा दी गई है।
दिनांक: ओ.का.प्र./सी.डी.डी
Date: 22-05-2019 for JWM/CDD

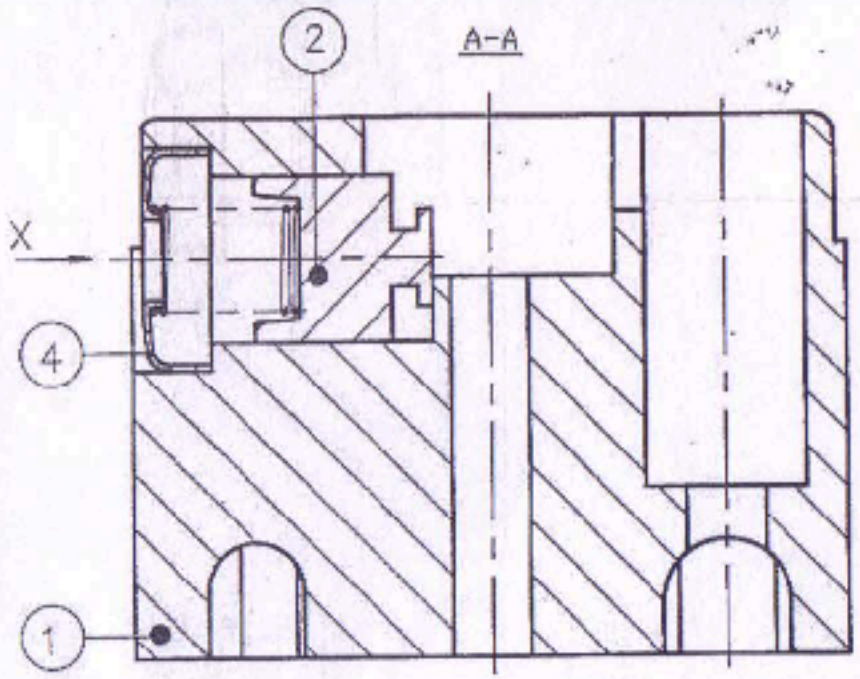

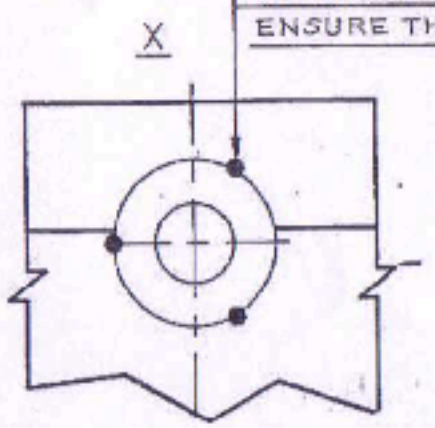

ITEM 4 TO BE SECURED IN POSITION
BY STABBING AT THREE EQUISPACED PLACES AS SHOWN.
ENSURE THAT IT DOES NOT PROTRUDE OUT OF DIA 22·7-0·1

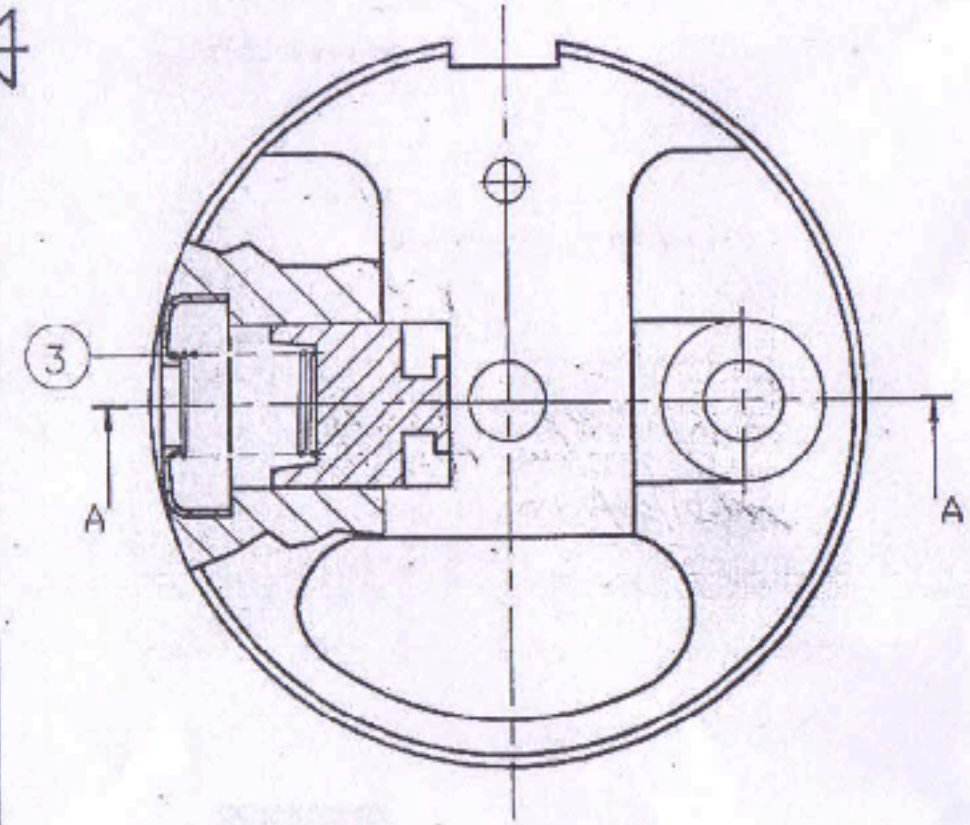

ITEM LIST

ITEM	QUANTITY	DESCRIPTION	REFERENCE
1	1	SHUTTER HOUSING	9102 00 03 01 05 001 00DB
2	1	CENTRIFUGAL BOLT	9102 00 03 01 05 002 00DA
3	1	SPRING CENTRIFUGAL BOLT	9102 00 03 01 05 003 00DB
4	1	COVER CENTRIFUGAL BOLT	9102 00 03 01 05 004 00DA

R. No.	DATE	AUTHORITY	BRIEF RECORD	ZONE	CD	GD
1	13-7-2000		COMPONENT DRG No. OF Sr.No.1,3 CHANGED			

SIGN

DRN. SABLE
CHD.
APPD. DATE: 15/6/98 FOR DIRECTOR
SEALED DATE:
SCALE: 5:1
EST.MASS:
DESIGN AUTHORITY ARDE

MATERIAL:
PROTECTIVE FINISH:
TITLE: SHUTTER HOUSING & CENTRIFUGAL BOLT ASSY.

DRG.No. 9102 00 03 01 05 00 00DB
IC SS S AA A C SST

PART No. | DS CAT.No. | AHSP

GEN.TOL.MEDIUM/~~COARSE/FINE~~ CLASS TO IS:2102	DRAWING CONVENTION CONFORM TO INDIAN STD. DIMNS IN mm UNLESS OTHERWISE STATED.

DRG.No. 9102 00 03 01 03 001 00DA

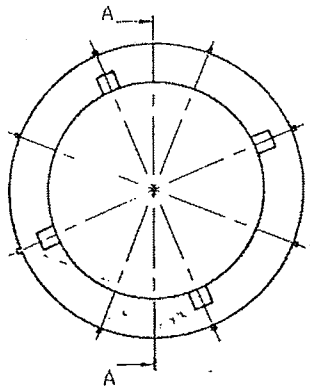

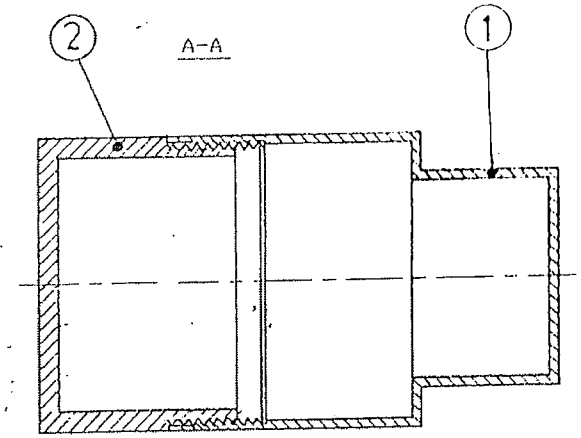

COPY ISSUED BY CDDO(AJ)
Date : 14-05-19

ITEM LIST

ITEM	QUANTITY	DESCRIPTION	REFERENCE
1	1	CONTAINER	9102 00 03 01 03 001 00DA
2	1	CAP CONTAINER	9102 00 03 01 03 002 00DA

R No.	DATE	AUTHORITY	BRIEF RECORD	ZONE	CD SIGN	GO

DRN. SABLE
CHD.
APPD. DATE: 15/6/98 FOR DIRECTOR
SEALED DATE:
SCALE: 2:1
EST.MASS
DESIGN AUTHORITY ARDE
MATERIAL:
PROTECTIVE FINISH:
TITLE: TRANSIT CONTAINER FOR ISD FUZE
DRG.No. 9102 00 03 01 03 001 00DA
PART No.
DS CAT.No.
AHSP

GEN.TOL.MEDIUM/~~COARSE/FINE~~ CLASS TO IS:2102	DRAWING CONVENTION CONFORM TO INDIAN STD. DIMNS IN mm UNLESS OTHERWISE STATED.

DRG.No. 9 1 0 2 (IC) 0 0 (SS) 0 3 (S) 0 1 (AA) 0 4 (A) 0 0 0 (C) 0 0 D B (SST)

COPY ISSUED BY CDD/OFAJ
यह प्रति का डी डी/आ. फा. ए. ज. द्वारा की गई है।
दिनांक:
Date : 14-05-2019 for JAM/CDD

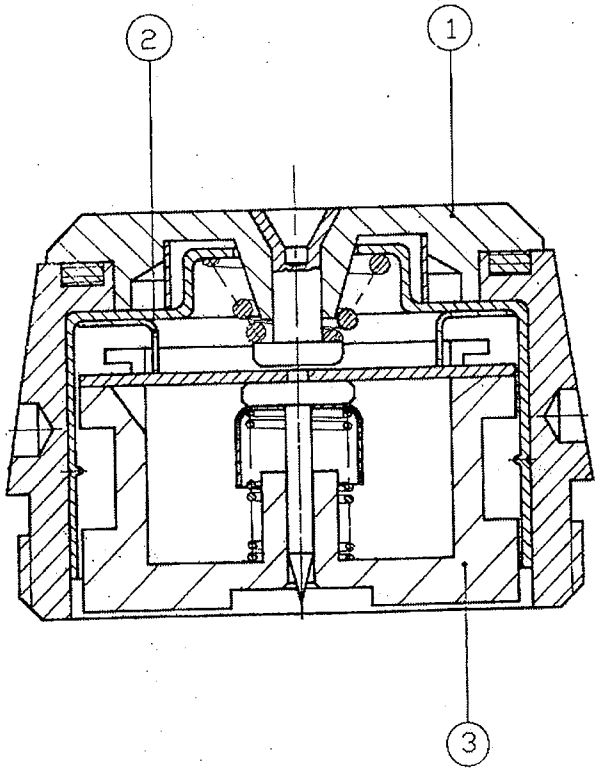

ITEM LIST

ITEM	QUANTITY	DESCRIPTION	REFERENCE
1	1	BODY UPPER ASSY	9102 00 03 04 10 000 00DB
2	1	SPACER	9102 00 03 01 04 001 00DB
3	1	STRIKER SLEEVE ASSY	9102 00 03 04 11 000 00DB

R No.	DATE	AUTHORITY	BRIEF RECORD	ZONE	CD	GD
1	13-7-2000		COMPONENTS DRG No. CHANGED			

SIGN

DRN. SABLE
CHD.
APPD.
DATE: 15/6/98 FOR DIRECTOR
SEALED
DATE:
SCALE: 5:1
EST.MASS:
MATERIAL:
PROTECTIVE FINISH:
TITLE:
BODY UPPER & STRIKER SLEEVE ASSY.
DESIGN AUTHORITY ARDE

DRG.No. 9 1 0 2 (IC) 0 0 (SS) 0 3 (S) 0 1 (AA) 0 4 (A) 0 0 0 (C) 0 0 D B (SST)

PART No.
DS CAT.No.
AHSP

GEN.TOL.MEDIUM/~~COARSE/FINE~~ CLASS III IS:2102	DRAWING CONVENTION CONFORM TO INDIAN STD. DIMNS IN mm UNLESS OTHERWISE STATED.

DRG.No. 9102 00 03 10 17 000 00DB

COPY ISSUED BY CDD/OFAJ
यह प्रति सी डी डी/ओ. एफ.ए. जे. द्वारा दी गई है।
दिनांक: का.का.प्र./सी.डी.डी
Date : 14-05-2019 for JWM/CDD

TO BE FLARED OPEN *
CRACKS NOT PERMITTED.

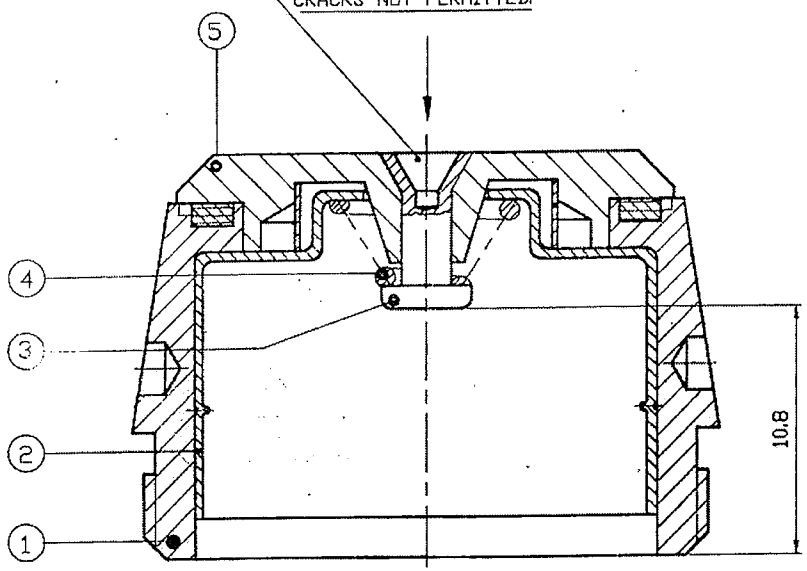

* FLARING SHOULD ENSURE THAT RIVET REMAINS IN FIRM POSITION WHEN LOAD OF 100 Kg IS APPLIED IN THE DIRECTION OF ARROW OVER THE RIVET.

NOTES:

1) NO CRACKS ARE PERMITTED IN THE FLARED PORTION OF ITEM 3 AFTER FLARING OPERATION.

2) THERE SHOULD NOT BE ANY GAP BETWEEN COVER FUZE AND BODY UPPER

ITEM LIST

ITEM	QUANTITY	DESCRIPTION	REFERENCE
1	1	BODY UPPER AND SEALING WASHER ASSY	9102 00 03 10 17 000 00DB
2	1	COVER STRIKER SLEEVE	9102 00 03 04 10 001 00DB
3	1	RIVET	9102 00 03 04 10 002 00DA
4	1	CONICAL SPRING	9102 00 03 04 10 003 00DB
5	1	COVER FUZE AND LEAF SPRING ASSY.	9102 00 03 10 18 000 00DB

R No.	DATE	AUTHORITY	BRIEF RECORD	ZONE	CD SIGN	GD SIGN
1	13.7.2000		COMPONENTS DRG No. & Sr. No. 1,2,4,5 CHANGED			

DRN. SABLE
CHD.
APPD. DATE: 15/6/98 FOR DIRECTOR
SEALED DATE:
SCALE: 2:1
EST.MASS:
DESIGN AUTHORITY: ARDE
MATERIAL:
PROTECTIVE FINISH:
TITLE: BODY UPPER ASSY.

DRG.No. 9102 00 03 04 10 000 00DB
(IC SS S AA A C SST)

PART No. | DS CAT.No. | AHSP

COPY ISSUED BY CDD/OFAJ
यह प्रति सी डी डी/ओ. एफ.ए. जे.
द्वारा दी गई है।
दिनांक: का.प्र./सी.डी.डी
Date : 14-05-2019 for JWM/CDD

DRG.No. 9 1 0 2 0 0 0 3 1 0 1 7 0 0 1 0 0 D B
IC SS S AA A C SST

GEN.TOL.MEDIUM/~~COARSE/FINE~~ CLASS TO IS:2102

DRAWING CONVENTION CONFORM TO INDIAN STD. DIMNS IN mm UNLESS OTHERWISE STATED.

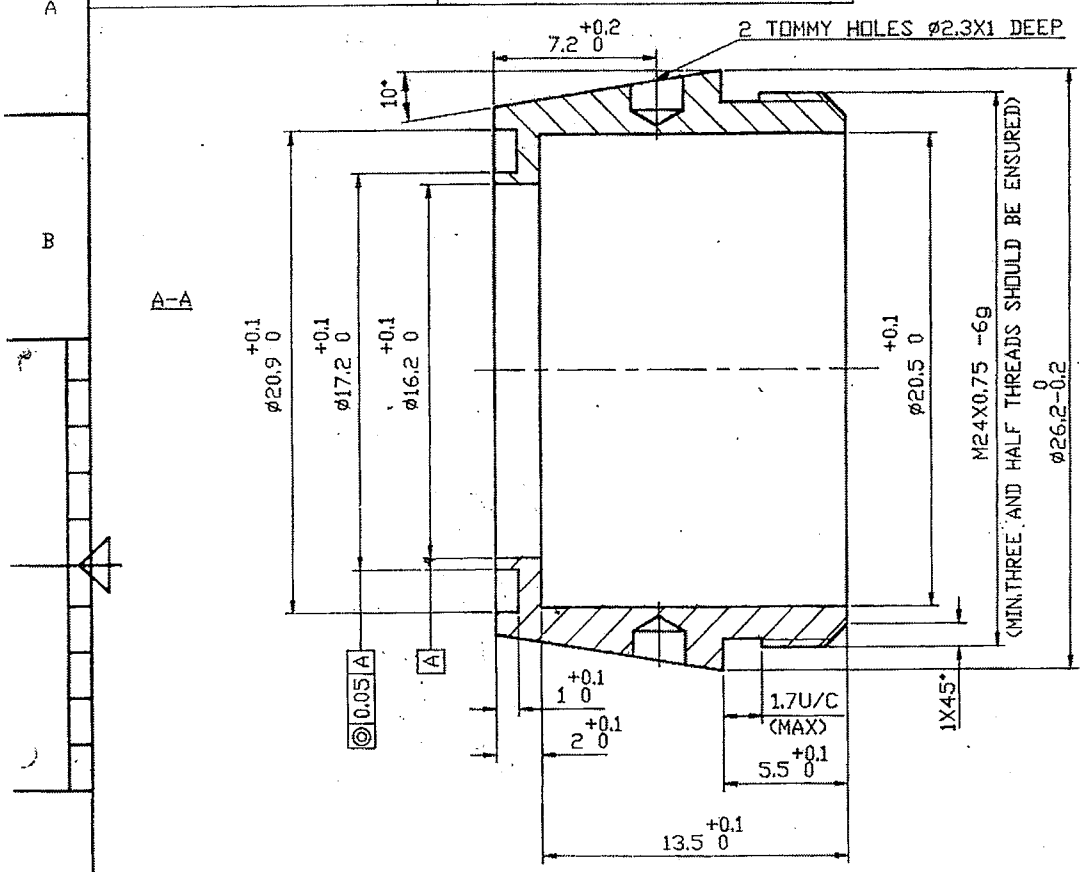

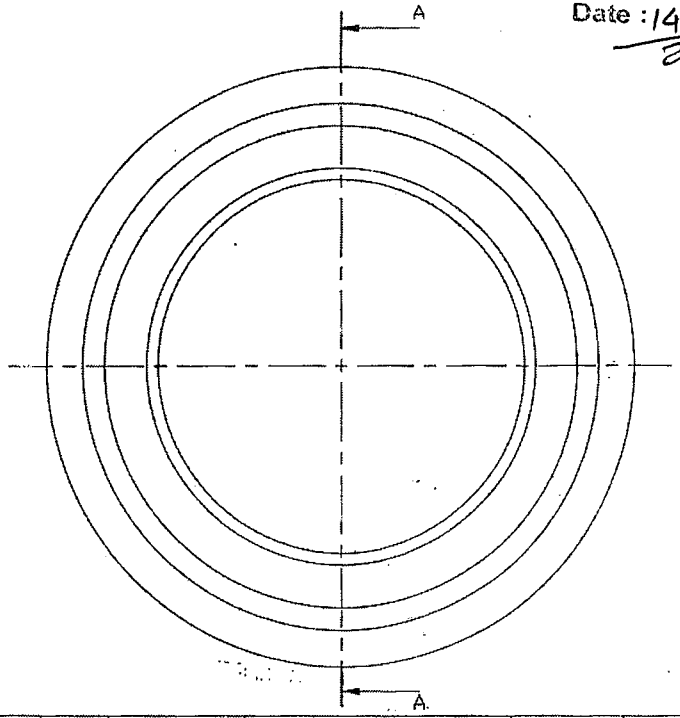

NOTES:
1) DIMNS. APPLY AFTER PLATING.
2) BURRS/SHARP EDGES NOT PERMITTED.
3) GROOVE DIMENSION SHOULD ACCOMMODATE SEALING WASHER PERFECTLY.

R No.	DATE	AUTHORITY	BRIEF RECORD	ZONE	CD	GD
1	5-7-2000		ALTERNATIVE MATL ADDED			

SIGN

DRN. SABLE | CHD. | APPD. | DATE: 15/6/98 DIR. DIRECTOR | SEALED DATE:

MATERIAL: ALUMINIUM TO SPEC. IS:733-1983 24345 WP OR BS:1474 GRADE 2014 A

PROTECTIVE FINISH: TO BE ANODISED TO SPEC. DEF 151-1966 TYPE 2

SCALE: 5:1 | EST.MASS: 5.49 g

TITLE: BODY UPPER

DESIGN AUTHORITY ARDE

DRG.No. 9 1 0 2 0 0 0 3 1 0 1 7 0 0 1 0 0 D B
IC SS S AA A C SST

PART No. | DS CAT.No. | AHSP

DRG.No. 9 1 0 2 / 0 0 / 0 3 / 0 1 / 0 3 / 0 0 2 / 0 0 D A
IC SS S AA A C SST

GEN.TOL.MEDIUM/~~SBARSE/FINE~~ CLASS TO IS:2102

DRAWING CONVENTION CONFORM TO INDIAN STD. DIMNS IN mm UNLESS OTHERWISE STATED.

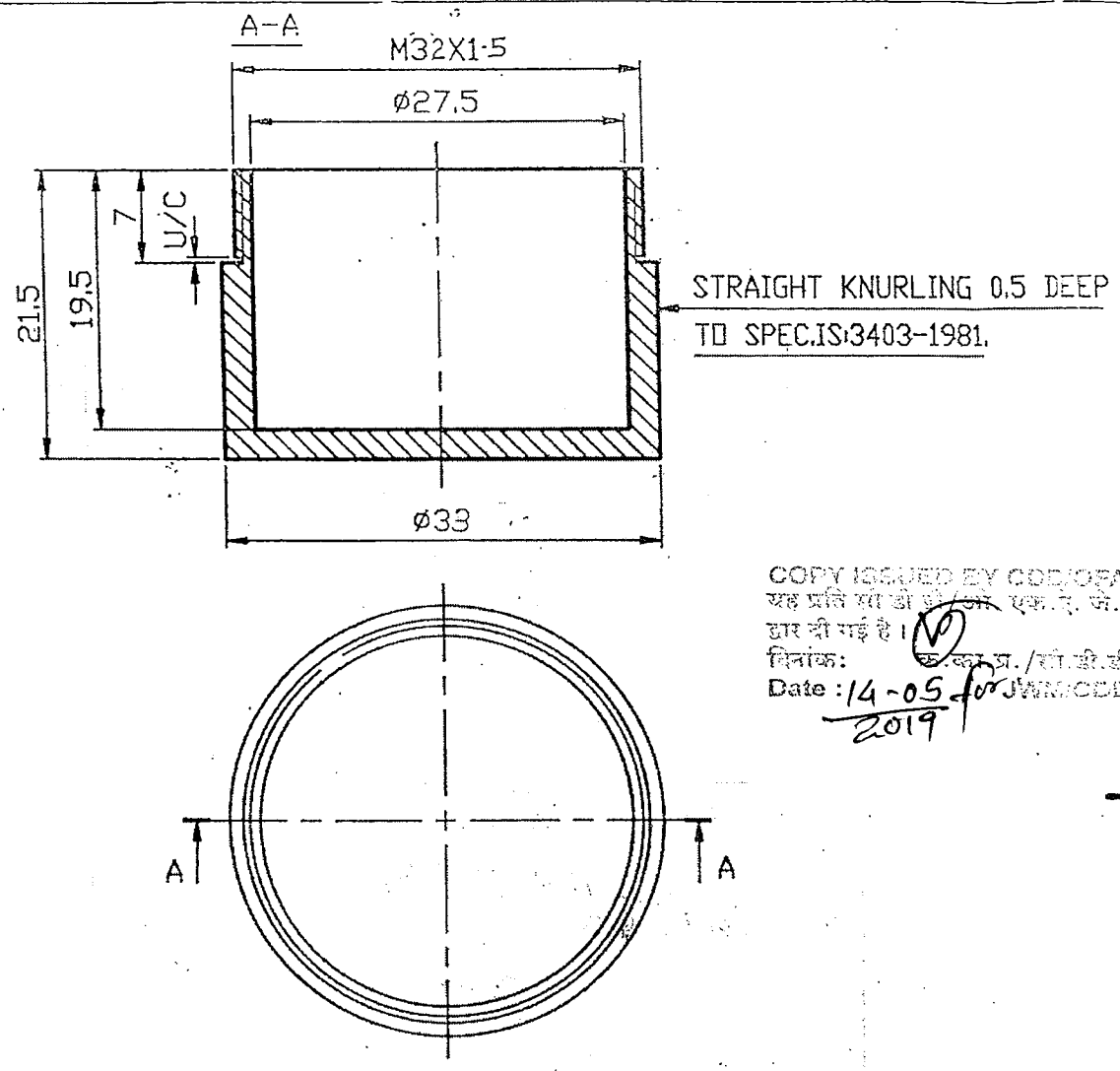

COPY ISSUED BY CDE/OPA
यह प्रति ए.डी.ई. एक.ए.ए. जे. द्वारा दी गई है।
दिनांक: क.का.प्र./सी.डी.डी
Date : 14-05-2019 for JWM/CDD

R No.	DATE	AUTHORITY	BRIEF RECORD	ZONE	CD	GD
					SIGN	

DRN. SABLE
CHD.
APPD.
DATE: 15/6/98 FOR DIRECTOR
SEALED DATE:
SCALE: 2:1
EST.MASS
DESIGN AUTHORITY ARDE

MATERIAL: HDPE Gd.C TYPE 1 TO SPEC. JSS 9330-03:1995

PROTECTIVE FINISH:

TITLE: CAP CONTAINER

DRG.No. 9 1 0 2 / 0 0 / 0 3 / 0 1 / 0 3 / 0 0 2 / 0 0 D A
IC SS S AA A C SST

PART No. | DS CAT No. | AHSP

(2)

DRG.No. 9 1 0 2 0 0 0 3 0 4 1 1 0 0 3 0 0 D B

GEN.TOL.MEDIUM/~~COARSE/FINE~~ CLASS TO IS:2102

DRAWING CONVENTION CONFORM TO INDIAN STD. DIMNS IN mm UNLESS OTHERWISE STATED.

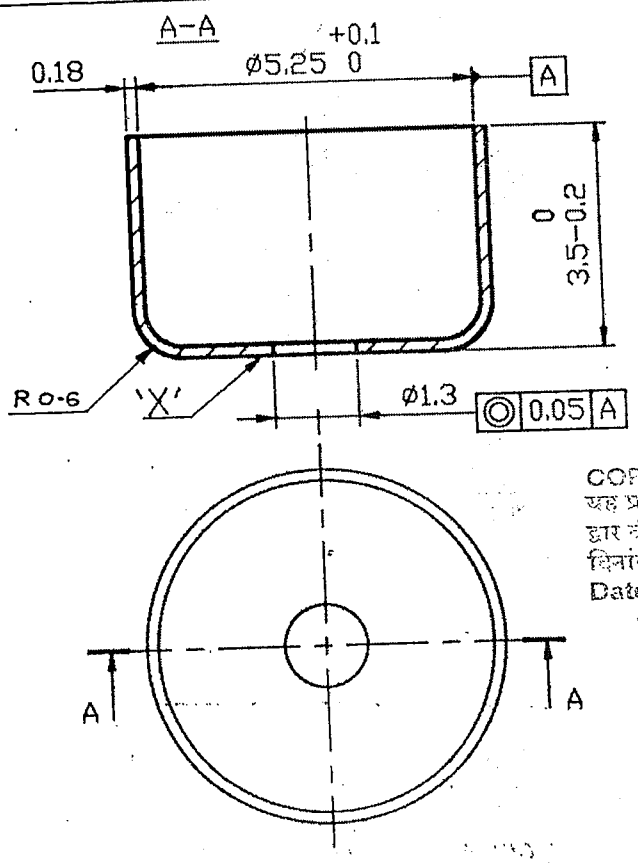

COPY ISSUED BY CDA(PA) यह प्रति रक्षा ली. ली. का. (प.) द्वारा दी गई है। दिनांक: का.का.प्र./सी.ए.डी. Date : 14-05-2019 for JN

NOTES:

1) DIMNS. APPLY AFTER PLATING.

2) BURRS/SHARP EDGES NOT PERMITTED.

3) SURFACE MARKED 'X' MUST BE FLAT & SQUARE TO THE AXIS

R No.	DATE	AUTHORITY	BRIEF RECORD	ZONE	CD	GD
1	14-6-99		OUTSIDE R0.6 WAS INSIDE	B-1,2	SIGN	

DRN. SABLE CHD.

APPD. DATE: 15/6/98 FOR DIRECTOR

SEALED DATE:

SCALE: 10:1 EST.MASS: 0.11 g

DESIGN AUTHORITY ARDE

MATERIAL: STEEL SHEET TO SPEC. IS:513-1986 Gd.DD.

PROTECTIVE FINISH: TO BE ZINC PLATED TO SPEC. IS:1573 FeZn5 FOLLOWED BY CHROMATE PASSIVATION.

TITLE: CAP SPRING STRIKER

DRG.No. 9 1 0 2 0 0 0 3 0 4 1 1 0 0 3 0 0 D B

PART No. | DS CAT No. | AHSP

DRG.No. 9 1 0 2 0 0 0 3 0 1 0 5 0 0 2 0 0 D A
IC SS S AA A C SST

GEN.TOL.MEDIUM/~~COARSE/FINE~~ CLASS TO IS:2102

DRAWING CONVENTION CONFORM TO INDIAN STD.
DIMNS IN mm UNLESS OTHERWISE STATED.

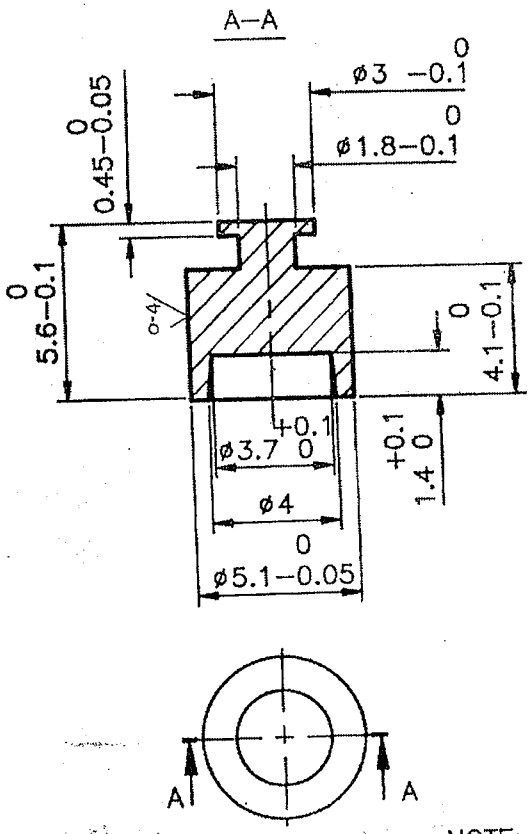

COPY ISSUED BY CDD/OTA
यह प्रति सी डी डी/ओ. एच. ई. द्वारा दी गई है
दिनांक:
Date : 14-05-2019 for JWM/CDD

NOTE:
BURRS/SHARP EDGES NOT PERMITTED.

R No.	DATE	AUTHORITY	BRIEF RECORD	ZONE	CD	GD
					SIGN	

DRN. SABLE
CHD.
APPD. DATE: 15/6/98 FOR DIRECTOR
SEALED DATE:
SCALE: 5:1
EST.MASS: 0.54 g
DESIGN AUTHORITY ARDE

MATERIAL:
STAINLESS STEEL TO SPEC. BS 970 Pt.I–1983 310 OR 410.
PROTECTIVE FINISH:
TITLE:
CENTRIFUGAL BOLT

DRG.No. 9 1 0 2 0 0 0 3 0 1 0 5 0 0 2 0 0 D A
IC SS S AA A C SST

PART No.
DS CAT No.
AHSP

30

DRG.No. 9 1 0 2 (IC) 0 0 (SS) 0 3 (S) 0 4 (AA) 1 0 (A) 0 0 3 (C) 0 0 D B (SST)

GEN.TOL.MEDIUM/~~COARSE/FINE~~ CLASS TO IS:2102

DRAWING CONVENTION CONFORM TO INDIAN STD. DIMNS IN mm UNLESS OTHERWISE STATED.

TOLERANCES ON SPRING SPEC. IS:7906 Pt.II

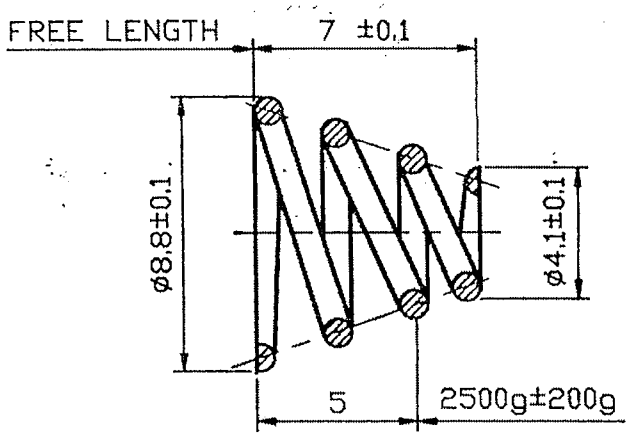

COPY ISSUED BY CONTROLLER
यह प्रति श्री डी.सी. एक. द्वारा दी गई है।
दिनांक: 14-05-2019
Date : 14-05-2019 for JVM KOLB

WIRE DIA ---------- 0.90

No. OFF EFFECTIVE COILS --- 2.5

WOUND ---------- L.H.

APPROX. 1/2 COIL AT EACH END TO BE CLOSED IN & SQUARE TO THE AXIS.

NOTES:

1) THERE SHOULD NOT BE ANY PERMANENT SET WHEN IT IS COMRESSED & KEPT FOR 48 HOURS.

2) DIMNS. APPLY AFTER PLATING.

R No.	DATE	AUTHORITY	BRIEF RECORD	ZONE	CD	GD
1	11-7-2000		TIME DURATION 48 HRS. WAS 96 HRS.			

SIGN

DRN. SABLE

CHD.

APPD.

DATE: 15/6/98 FOR DIRECTOR

SEALED DATE:

MATERIAL: SPRING STEEL WIRE TO SPEC. IS:4454 Pt.I Gd.3

PROTECTIVE FINISH: TO BE CADMIUM PLATED TO SPEC. IS:1572 Cd8. FOLLOWED BY CHROMATE PASSIVATION.

SCALE: 5:1

EST.MASS: 0.32 g

TITLE:

CONICAL SPRING

DESIGN AUTHORITY ARDE

DRG.No. 9 1 0 2 (IC) 0 0 (SS) 0 3 (S) 0 4 (AA) 1 0 (A) 0 0 3 (C) 0 0 D B (SST)

PART No.

DS CAT No.

AHSP

DRG.No.	9 1 0 2	0 0	0 3	0 1	0 3	0 0 1	0 0 D A
	IC	SS	S	AA	A	C	SST

GEN.TOL.MEDIUM/~~COARSE/FINE~~ CLASS TO IS:2102

DRAWING CONVENTION CONFORM TO INDIAN STD. DIMNS IN mm UNLESS OTHERWISE STATED.

COPY ISSUED BY CDD/OFAJ
यह प्रति [illegible] द्वारा दी गई है।
विनांक: [illegible] प्र./सी.डी.डी
Date : 14-05-2019 for JWM/CDD

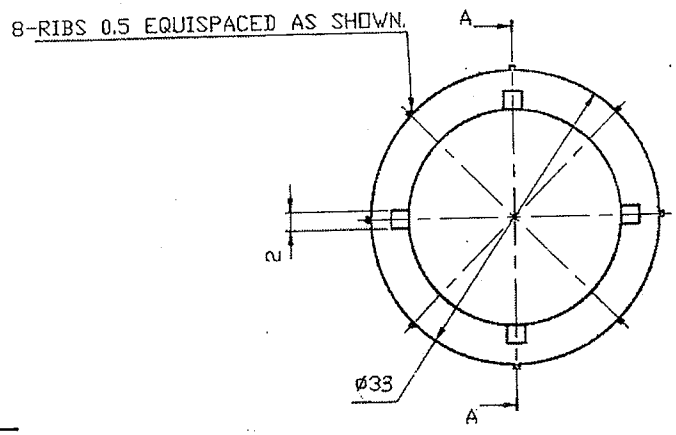

A-A

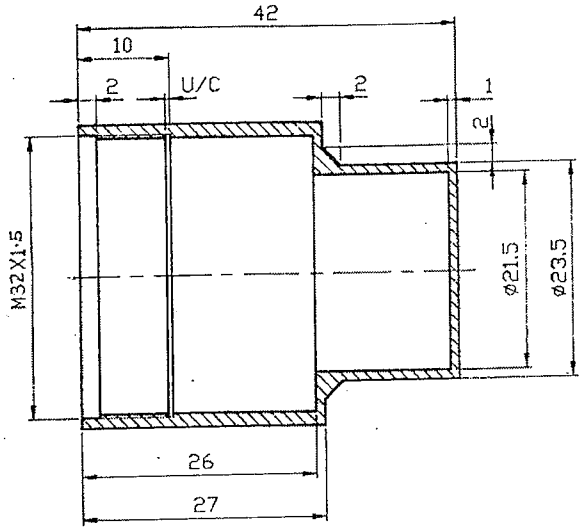

R No.	DATE	AUTHORITY	BRIEF RECORD	ZONE	CD SIGN	GD SIGN

DRN. SABLE
CHD.
APPD. DATE:15/6/98 FOR DIRECTOR
SEALED DATE:
SCALE: 2:1
EST.MASS
DESIGN AUTHORITY: ARDE

MATERIAL: HDPE Gd. C TYPE 1 TO SPEC. JSS 9330-03:1995.

PROTECTIVE FINISH:

TITLE: CONTAINER

DRG.No. 9 1 0 2 (IC) 0 0 (SS) 0 3 (S) 0 1 (AA) 0 3 (A) 0 0 1 (C) 0 0 D A (SST)

PART No. | DS CAT.No. | AHSP

32

DRG.No. 9 1 0 2 0 0 0 3 0 1 0 5 0 0 4 0 0 D A

GEN.TOL.MEDIUM/~~COARSE/FINE~~ CLASS TO IS:2102

DRAWING CONVENTION CONFORM TO INDIAN STD. DIMNS IN mm UNLESS OTHERWISE STATED.

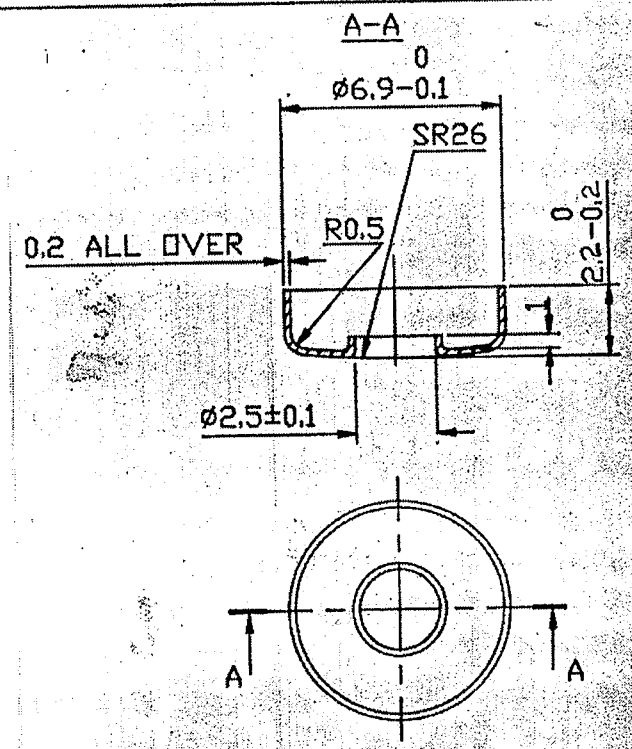

COPY ISSUED BY GDD/CSAJ
मई श्री ... ओ. एक.ए. जे.
द्वारा जारी
दिनांक: ज.का.प्र./सी.डी.डी
Date: 14-05-2019 for JWM/CDD

NOTES:
1) DIMNS. APPLY AFTER PLATING.
2) BURRS/SHARP EDGES NOT PERMITTED.

R No.	DATE	AUTHORITY	BRIEF RECORD	ZONE	CD SIGN	GD

DRN. SABLE | CHD.

APPD. DATE: 15/6/98 FOR DIRECTOR

SEALED DATE:

MATERIAL: STEEL SHEET TO SPEC. IS:513-1986 Gd. DD

PROTECTIVE FINISH: TO BE ZINC PLATED TO SPEC. IS:1573 FeZn5. FOLLOWED BY CHROMATE PASSIVATION.

SCALE: 5:1 | EST.MASS: 0.08 g

TITLE: COVER CENTRIFUGAL BOLT

DESIGN AUTHORITY ARDE

DRG.No. 9 1 0 2 0 0 0 3 0 1 0 5 0 0 4 0 0 D A

PART No. | DS CAT No. | AHSP

32

GEN.TOL.MEDIUM/~~COARSE/FINE~~ CLASS TO IS:2102	DRAWING CONVENTION CONFORM TO INDIAN STD. DIMNS IN mm UNLESS OTHERWISE STATED.

DRG.No. 9 1 0 2 (IC) 0 0 (SS) 0 3 (S) 1 0 (AA) 1 8 (A) 0 0 0 (C) 0 0 D B (SST)

COPY ISSUED BY CDO/OFAJ
द्वारा जारी
टिप्पणी: क.का.प्र./सी.डी.डी
Date : 14-05-2019 for JMM/CCD

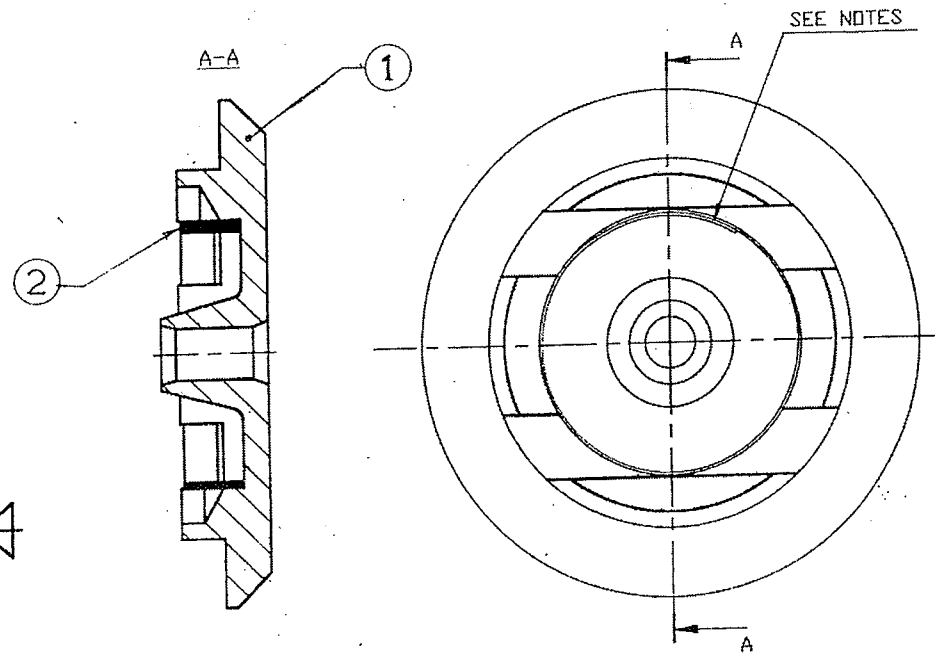

NOTES:

1) THERE SHOULD NOT BE ANY GAP WHERE THE LEAF SPRING OVERLAPS WHEN ASSEMBLED.

2) THERE SHOULD NOT BE ANY DEFORMATION OF LEAF SPRING DURING ASSEMBLY.

ITEM LIST

ITEM	QUANTITY	DESCRIPTION	REFERENCE
1	1	COVER FUZE	9102 00 03 10 18 001 00DB
2	1	LEAF SPRING	9102 00 03 10 18 002 00DB

R No.	DATE	AUTHORITY	BRIEF RECORD	ZONE	CD	GD
1	13-7-2000		COMPONENTS DRG No. CHANGED			

SIGN

DRN. SABLE	CHD.	MATERIAL:
APPD. DATE: 15/6/98	DIRECTOR	PROTECTIVE FINISH:
SEALED DATE:		
SCALE: 5:1	EST.MASS:	TITLE: COVER FUZE & LEAF SPRING ASSY.
DESIGN AUTHORITY ARDE		

DRG.No. 9 1 0 2 (IC) 0 0 (SS) 0 3 (S) 1 0 (AA) 1 8 (A) 0 0 0 (C) 0 0 D B (SST)

PART No.	DS CAT.No.	AHSP

DRG.No.	9	1	0	2	0	0	0	3	1	0	1	8	0	0	1	0	0	D	B
	IC				SS		S		AA		A		C			SST			

GEN.TOL.MEDIUM/~~COARSE/FINE~~ CLASS TO IS:2102	DRAWING CONVENTION CONFORM TO INDIAN STD. DIMNS IN mm UNLESS OTHERWISE STATED.

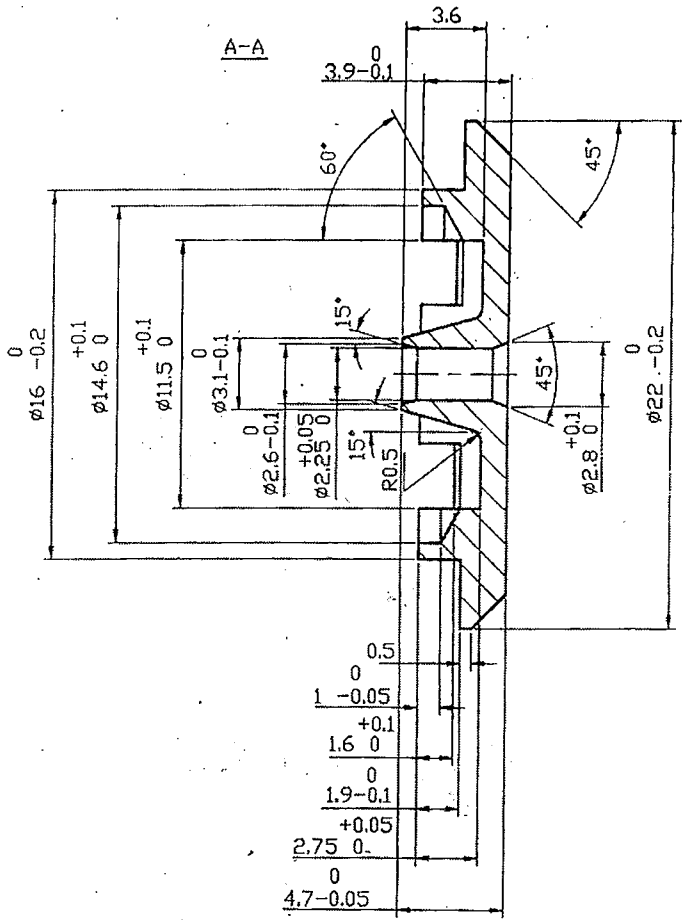

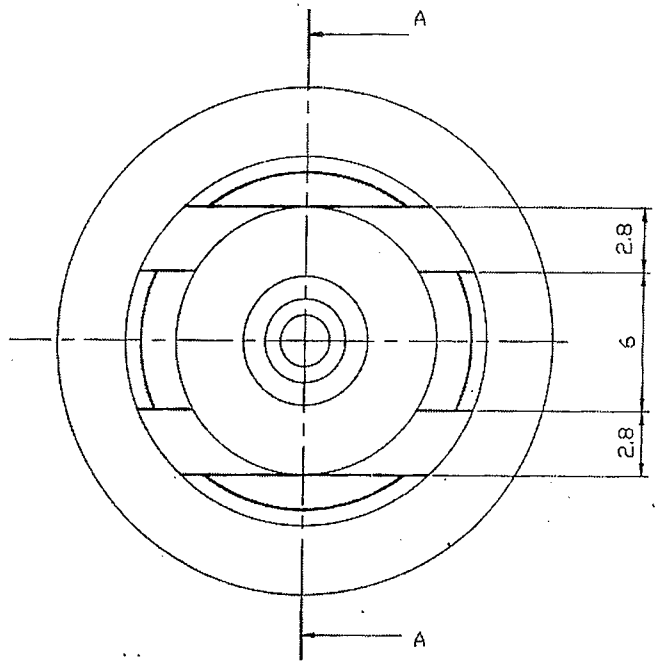

NOTES:

1) DIMNS. APPLY AFTER PLATING

2) BURRS/SHARP EDGES NOT PERMITTED.

R No.	DATE	AUTHORITY	BRIEF RECORD	ZONE	CD SIGN	GD SIGN
1	5-7-2000		ALTERNATIVE MATL. ADDED			

DRN. SABLE	CHD.
APPD. DATE: 15/6/98	FOR DIRECTOR
SEALED DATE:	
SCALE: 5:1	EST.MASS: 2.04 g
DESIGN AUTHORITY ARDE	

MATERIAL:
ALUMINIUM TO SPEC. IS:733-1983 24345 WP OR BS:1474 GRADE 2014 A

PROTECTIVE FINISH:
TO BE ANODISED TO SPEC. DEF 151-1966 TYPE 2

TITLE:
COVER FUZE

PART No. | DS CAT.No. | AHSP

43

GEN.TOL.MEDIUM/SEMI-FINE CLASS TO IS:2102	DRAWING CONVENTION CONFORM TO INDIAN STD. DIMNS IN mm UNLESS OTHERWISE STATED.

A–A

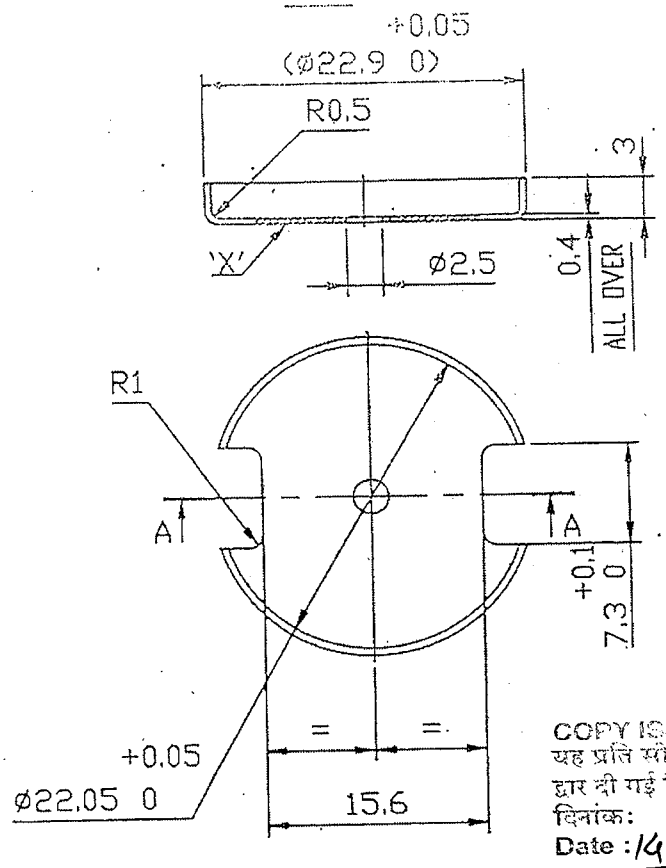

COPY ISSUED BY CDD/OFAJ
यह प्रति सी डी डी/ओ. एफ.ए. जे. द्वारा दी गई है।
दिनांक: 14-05-2019
Date : for JWM/CDD

NOTES:

1) DIMNS. APPLY AFTER PLATING
2) BURRS/SHARP EDGES NOT PERMITTED
3) SURFACE MARKED 'X' MUST BE FLAT & SQUARE TO THE AXIS.

R No.	DATE	AUTHORITY	BRIEF RECORD	ZONE	CD	GD
					SIGN	

DRN. SABLE	CHD.	MATERIAL: STEEL SHEET TO SPEC. IS:1079 Gd. DD
APPD, DATE: 15/6/98	FOR DIRECTOR	PROTECTIVE FINISH: TO BE ZINC PLATED TO SPEC. IS:1573 FeZn5, FOLLOWED BY CHROMATE PASSIVATION.
SEALED DATE:		
SCALE: 2:1	EST.MASS: 1.45 g	TITLE: COVER SHUTTER HOUSING
DESIGN AUTHORITY ARDE		

DRG.No. 9 1 0 2 (IC) 0 0 (SS) 0 3 (S) 0 0 (AA) 0 1 (A) 0 1 4 (C) 0 0 D A (SST)

PART No.	DS CAT No.	AHSP

A3

DRG.No. 9 1 0 2 0 0 0 3 0 4 1 0 0 0 1 0 0 D B
SST SS S AA A C SST

GEN.TOL.MEDIUM/~~COARSE/FINE~~ CLASS TO IS:2102

DRAWING CONVENTION CONFORM TO INDIAN STD. DIMNS IN mm UNLESS OTHERWISE STATED.

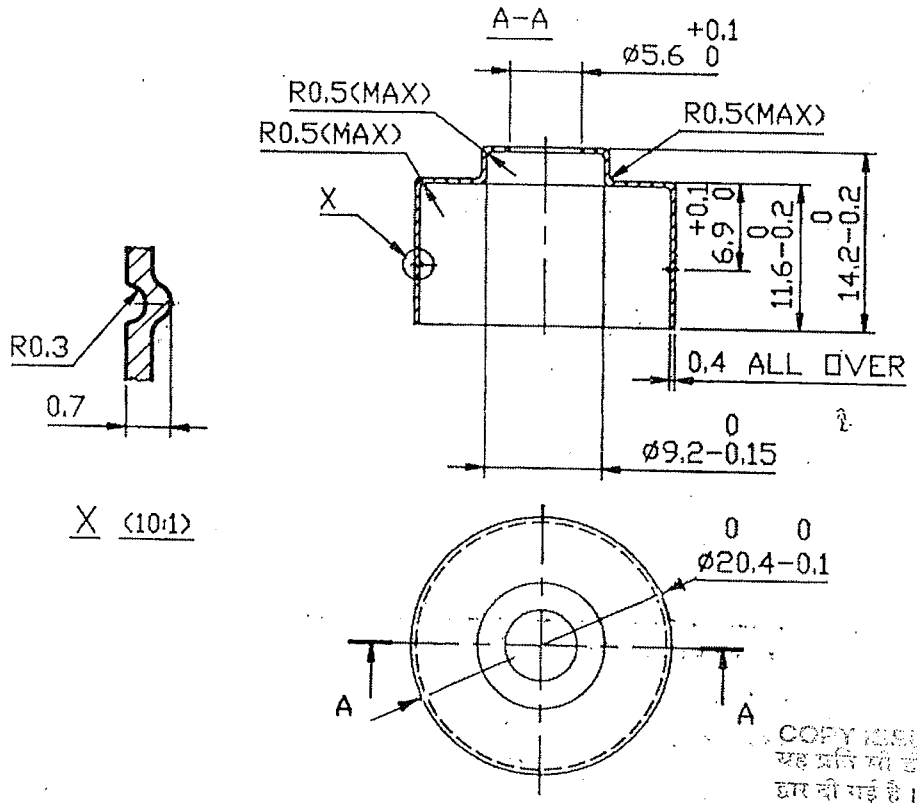

COPY ISSUED BY C... यह प्रति ... द्वारा दी गई है। दिनांक: Date : 14-05-2019 for ...

NOTES:
1) DIMNS. APPLY AFTER PLATING.
2) BURRS/SHARP EDGES NOT PERMITTED.
3) SURFACE OF DIMPLE PROTRUSION SHOULD BE SMOOTH FROM INSIDE.

R No.	DATE	AUTHORITY	BRIEF RECORD	ZONE	CD	GD
1	14-6-99		ARROW FOR ϕ 20.4 SHOWN CORRECTLY C-23			

SIGN

DRN. SABLE CHD.

APPD. DATE: 15/6/98 FOR DIRECTOR

SEALED DATE:

MATERIAL: STEEL SHEET TO SPEC. IS:513-1986 Gd. DD

PROTECTIVE FINISH: TO BE NICKEL PLATED TO SERVICE Gd.No.3 TO SPEC. IS:1068-1985. OR ELECTROLESS NICKEL PLATING WITH BOND STRENGTH MIN.2800 Kg/Cm²

SCALE: 2:1 EST.MASS: 3 g

TITLE:

COVER STRIKER SLEEVE

DESIGN AUTHORITY ARDE

DRG.No. 9 1 0 2 0 0 0 3 0 4 1 0 0 0 1 0 0 D B
IC SS S AA A C SST

PART No. DS CAT No. AHSP

38

DRG.No.	9	1	0	2	0	0	0	3	0	0	0	1	0	0	9	0	0	D	A
			IC		SS		S		AA		A		C					SST	

GEN.TOL.MEDIUM/~~COARSE/FINE~~ CLASS TO IS:2102

DRAWING CONVENTION CONFORM TO INDIAN STD. DIMNS IN mm UNLESS OTHERWISE STATED.

A–A

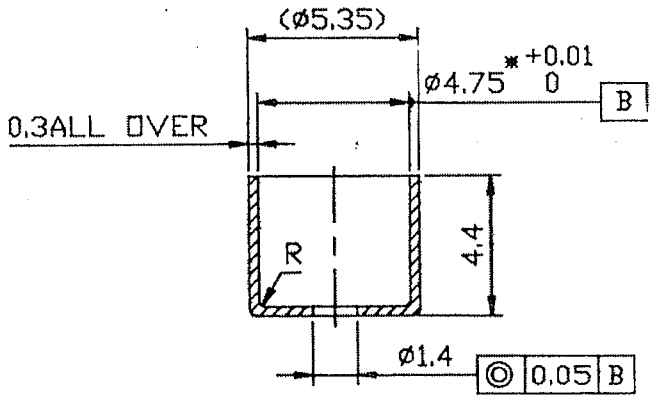

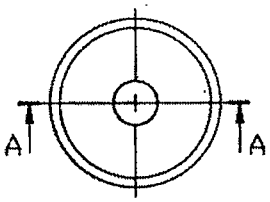

COPY ISSUED BY CDD/NPAJ
यह प्रति सी डी डी/एन.पी.ए.जे. द्वारा दी गई है।
दिनांक: का.कार्य.प्र./सी.डी.डी
Date : 14-05-2019 for JWM/CDD

NOTES:

1) DIMNS. APPLY AFTER PLATING.

2) HOLE ø1.4 SHOULD BE FREE FROM BURRS/SHARP EDGES.

3) * THIS DIMENSION IF ENSURES INTERFERENCE FIT ON HOUSING SRD TO COMPONENT No. 9102 00 03 00 01 005 00DA WITHIN 0.06 TO 0.08 mm IS ACCEPTABLE.

R No.	DATE	AUTHORITY	BRIEF RECORD	ZONE	CD SIGN	GD SIGN

DRN. SABLE	CHD.	MATERIAL: STEEL SHEET TO SPEC. IS:513-1986 Gd. EDD
APPD. DATE: 15/6/98	FOR DIRECTOR	PROTECTIVE FINISH: TO BE ZINC PLATED TO SPEC. IS:1573 FeZn5 FOLLOWED BY CHROMATE PASSIVATION.
SEALED DATE:		
SCALE: 5:1	EST.MASS: 0.18 g	TITLE: CUP I SRD
DESIGN AUTHORITY ARDE		

DRG.No.	9	1	0	2	0	0	0	3	0	0	0	1	0	0	9	0	0	D	A
			IC		SS		S		AA		A		C					SST	

PART No.	DS CAT No.	AHSP

33 . 3

DRG.No.	9	1	0	2	0	0	0	3	0	0	0	1	0	0	4	0	0	D	A
			IC		SS		S		AA		A		C					SST	

GEN.TOL.MEDIUM/~~COARSE/FINE~~ CLASS TO IS:2102

DRAWING CONVENTION CONFORM TO INDIAN STD. DIMNS IN mm UNLESS OTHERWISE STATED.

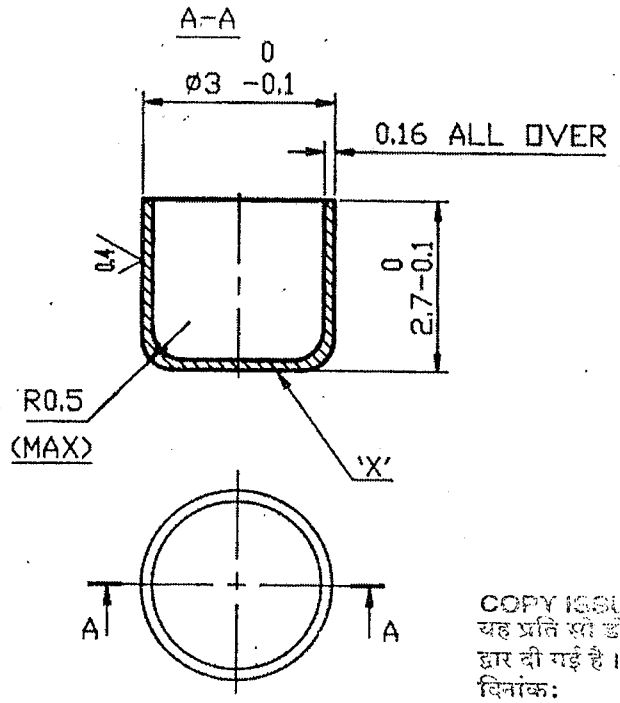

COPY ISSUED BY CDD/OFAJ
यह प्रति श्री डी.टी./आर. एक.ए. जे. द्वार दी गई है।
दिनांक: क.का.प्र./सी.डी.डी
Date : 14-05-2019 for JWM/CDD

NOTES:

1) DIMNS. APPLY AFTER PLATING.

2) BURRS/SHARP EDGES NOT PERMITTED.

3) SURFACE MARKED 'X' MUST BE FLAT & SQUARE TO THE AXIS.

R No.	DATE	AUTHORITY	BRIEF RECORD	ZONE	CD	GD
					SIGN	

DRN. SABLE | CHD. | APPD. | DATE: 15/6/98 FOR DIRECTOR | SEALED DATE:

MATERIAL: STEEL SHEET TO SPEC. IS:1079 Gd. DD

PROTECTIVE FINISH: TO BE NICKEL PLATED TO SERVICE Gd.No.3 TO SPEC. IS:1068-1985. OR ELECTROLESS NICKEL PLATING WITH BOND STRENGTH MIN.2800 Kg/Cm²

SCALE: 10:1 | EST.MASS: 0.03 g

TITLE:

CUP II SRD

DESIGN AUTHORITY ARDE

DRG.No. 9 1 0 2 0 0 0 3 0 0 0 1 0 0 4 0 0 D A

PART No. | DS CAT No. | AHSP

3E

DRG.No.	9	1	0	2	0	0	0	3	0	0	0	1	0	0	6	0	0	D	B
			IC		SS		S		AA		A		C					SST	

GEN.TOL.MEDIUM/~~COARSE/FINE~~ CLASS TO IS:2102

DRAWING CONVENTION CONFORM TO INDIAN STD. DIMNS IN mm UNLESS OTHERWISE STATED.

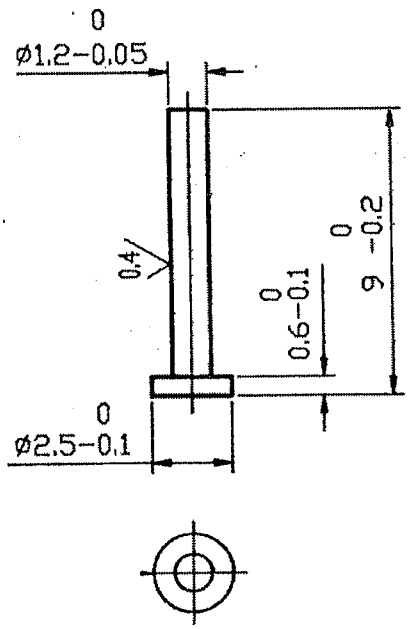

COPY ISSUED BY CDD/OFAJ
यह प्रति श्री डी.डी./ओ. एफ.ए. जे.
द्वारा दी गई है
दिनांक: आ.का.प्र./सी.डी.डी
Date : 14-05-2019 for JWM/CDD

NOTES:

1) BURRS/SHARP CORNERS & PIP NOT PERMITTED.

2) DIMNS. APPLY AFTER PLATING.

R No.	DATE	AUTHORITY	BRIEF RECORD	ZONE	CD	GD
1	9-12-99		MATL.GRADE 304 S31 WAS 304/303 S21 MATL.IS:6603-1972 04 Cr 18 Ni 10 ADDED.		D.m.P.	Ahm

SIGN

DRN. SABLE

CHD.

APPD. DATE: 15/6/98 FOR DIRECTOR

SEALED DATE:

MATERIAL: STAINLESS STEEL TO SPEC BS 970 Pt I -1983 Gd 304 S31 OR IS:6603-1972 04 Cr 18 Ni 10

ALT.MATL:- STEEL TO SPEC. IS:280-1962 HALFHARD CONDITION.

PROTECTIVE FINISH: TO BE NICKEL PLATED TO SERVICE Gd.No.3 TO SPEC. IS:1068-1985, OR ELECTROLESS PLATING WITH BOND STRENGTH MIN.2800 Kg/Cm.²

SCALE: 5:1

EST.MASS: 0.09 g

TITLE:

DETENT SRD

DESIGN AUTHORITY ARDE

DRG.No. 9 1 0 2 (IC) 0 0 (SS) 0 3 (S) 0 0 (AA) 0 1 (A) 0 0 6 (C) 0 0 D B (SST)

PART No.

DS CAT No.

AHSP

GEN.TOL.MEDIUM/~~COARSE/FINE~~ CLASS TO IS:2102	DRAWING CONVENTION CONFORM TO INDIAN STD. DIMNS IN mm UNLESS OTHERWISE STATED.

DRG.No. 9 1 0 2 (IC) 0 0 (SS) 0 3 (S) 0 0 (AA) 0 1 (A) 0 0 3 (C) 0 0 D B (SST)

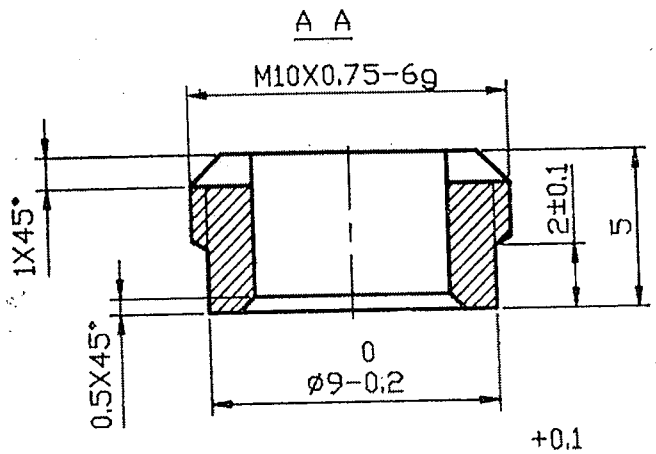

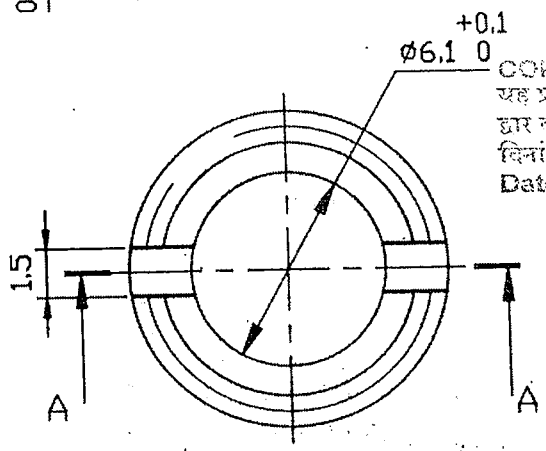

COPY MADE BY CDA/JWM/CDO
यह प्रति की गई है।
दिनांक:
Date : 14-05-2019

NOTES:

1) DIMNS. APPLY AFTER ANODISING

2) BURRS/SHARP EDGES NOT PERMITTED.

R No.	DATE	AUTHORITY	BRIEF RECORD	ZONE	CD	GD
1	5-7-2000		ALTERNATIVE MATL.ADDED			

SIGN

DRN. SABLE	CHD.
APPD. DATE: 15/6/98 FOR DIRECTOR	
SEALED DATE:	
SCALE: 5:1	EST.MASS: 0.47 g
DESIGN AUTHORITY ARDE	

MATERIAL:

AL.ALLOY TO SPEC. IS:733-24345 W OR WP. OR BS: 1474 GRADE 2014A

PROTECTIVE FINISH:

TO BE ANODISED TO SPEC. DEF 151-1966 TYPE 2

TITLE:

DETONATOR HOLDER

DRG.No. 9 1 0 2 (IC) 0 0 (SS) 0 3 (S) 0 0 (AA) 0 1 (A) 0 0 3 (C) 0 0 D B (SST)

PART No.	DS CAT No.	AHSP

DRG.No. 9 1 0 2 0 0 0 3 0 8 1 4 0 0 2 0 0 D A SST

GEN.TOL.MEDIUM/~~COARSE/FINE~~ CLASS TO IS:2102

DRAWING CONVENTION CONFORM TO INDIAN STD. DIMNS IN mm UNLESS OTHERWISE STATED.

BASED ON HEMRL DRG. NO. HEMRL DRG 1262 DET. No.2

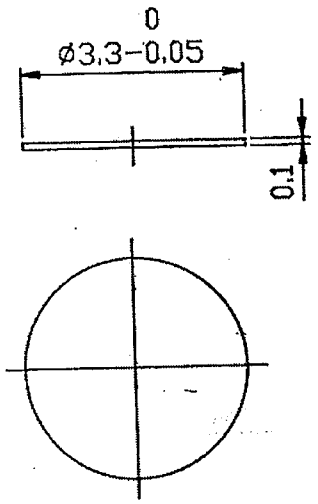

COPY ISSUED BY CDD/OFAJ
यह प्रति सी डी डी/ओ. एफ.ए. जे. द्वारा दी गई है।
दिनांक: 14-05-2019
Date :
क.का.प./सी.डी.डी
for JWM/CDD

R No.	DATE	AUTHORITY	BRIEF RECORD	ZONE	CD	GD
					SIGN	

DRN. SABLE | CHD.

APPD. DATE: 15/6/98 FOR DIRECTOR

SEALED DATE:

SCALE: 10:1 | EST.MASS: 0.002 g

DESIGN AUTHORITY ARDE

MATERIAL: ALUMINIUM FOIL TO SPEC. IS737 Gd.19000 CONDITION H4 OR B.S. 1470 Gd.1200

PROTECTIVE FINISH:

TITLE:

DISC

DRG.No. 9 1 0 2 (IC) 0 0 (SS) 0 3 (S) 0 8 (AA) 1 4 (A) 0 0 2 (C) 0 0 D A (SST)

PART No. | DS CAT No. | AHSP

54

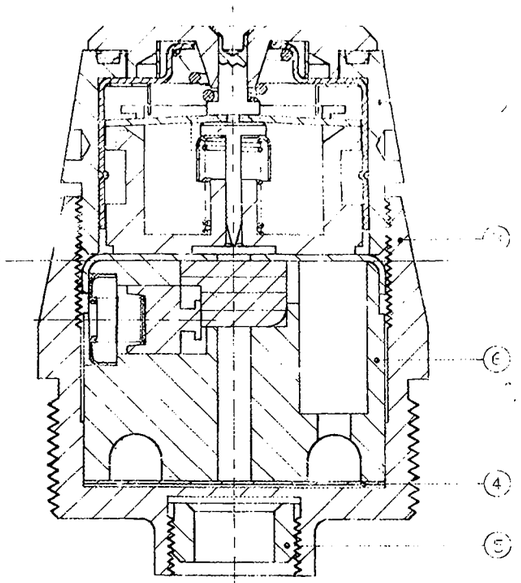

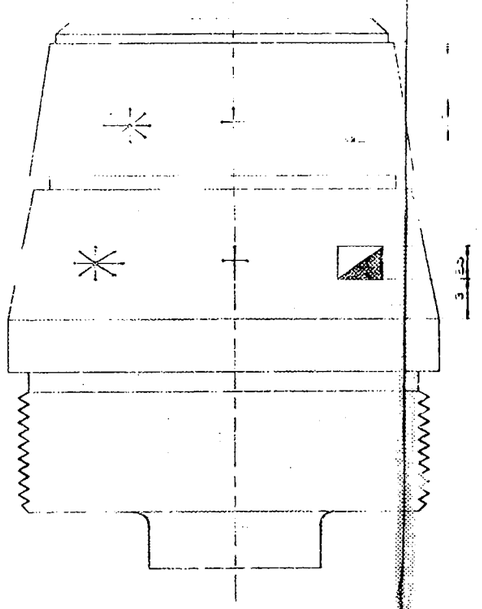

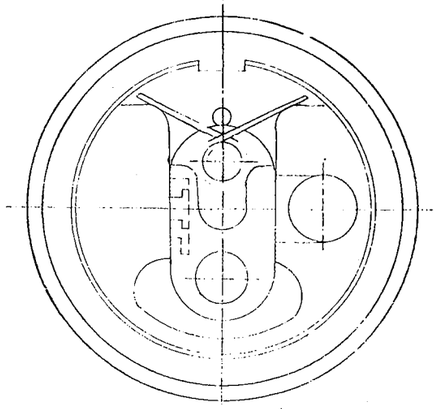

VIEW SHOWN SHUTTER [illegible] AT LEVEL [illegible]

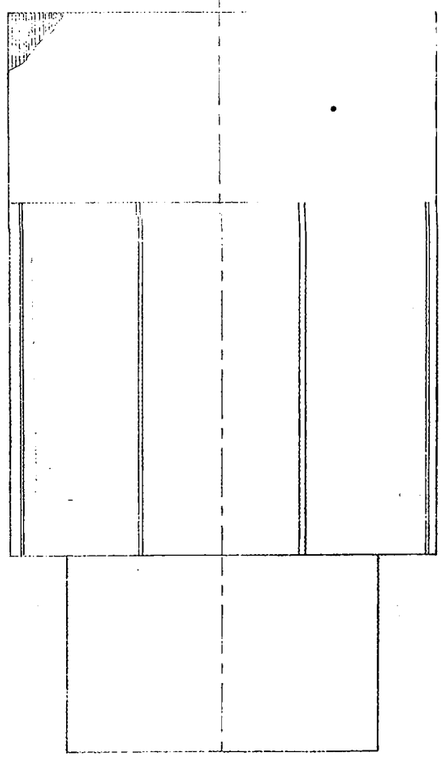

COPY EXTRACT BY [illegible]
[illegible]
Date: 14-05-2019

MARKING ON EMPTY FUZE

✻ EMPTY LOT No.
✝ MANUFACTURER'S MONOGRAM
◪ DATE OF MANUFACTURE (MONTH & YEAR)

NOMENCLATURE: FUZE ISD -

TO BE SCREEN PRINTED ON THE OPPOSITE SIDE TO THE EMPTY MARKING IN BLACK COLOUR WITH 2.5 mm TYPE

NOTE:

✻ COMPONENTS TO BE SUPPLIED SEPARATELY

ITEM LIST

	ITEM	QUANTITY	DESCRIPTION	REFERENCE
	1	1	TRANSIT CONTAINER FOR ISD FUZE	9102 00 03 01 03 000 00DA
	2	1	BODY UPPER AND STRIKER SLEEVE ASSY.	9102 00 03 01 04 000 00DB
	3	1	BODY COVER	9102 00 03 00 01 001 00DB
	4	1	PAPER DISC	9102 00 03 00 01 002 00DA
	5		DETONATOR HOLDER	9102 00 03 00 01 003 00DB
	6	1	SHUTTER HOUSING AND CENTRIFUGAL BOLT ASSY.	9102 00 03 01 05 000 00DB
✻	7	1	CUP II SRD	9102 00 03 00 01 004 00DA
✻	8	1	HOUSING SRD	9102 00 03 00 01 005 00DB
✻	9	1	DETENT SRD	9102 00 03 00 01 006 00DB
✻	10	1	SPRING SRD	9102 00 03 00 01 007 00DA
✻	11	1	SPRING SEATING SRD	9102 00 03 00 01 008 00DA
✻	12		CUP I SRD	9102 00 03 00 01 009 00DA
✻	13	1	SPRING I.D.	9102 00 03 00 01 010 00DA
✻	14	1	STRIKER I.D.	9102 00 03 00 01 011 00DA
✻	15	1	SHUTTER	9102 00 03 00 01 012 00DA
✻	16	1	SHUTTER SPRING	9102 00 03 00 01 013 00DB
✻	17	1	COVER SHUTTER HOUSING	9102 00 03 00 01 014 00DA

R No.	DATE	AUTHORITY	DRIFE RECORD	ZONE	CD	GD
2	14-2-96	COMPONENTS DRG. No. 01 S.No. 2,3,5,6,8,9,&16				
1	14-5-92	MISTAKE CORRECTED	CHANGED			

DRN DATE CHD MATERIAL
APPD DATE 16/6/98 FOR APPLICATION PROTECTIVE FINISH
SEALED DATE
SCALE 5:1 EST MASS TITLE FUZE I.S.D FOR 35 mm HE GRENADE RUDRA (EMPTY ASSY)
DESIGN AUTHORITY
ARDE
DRG No. 9102 00 03 00 01 000 00DC
IC SS S FA A C ASSF
PART No. DS CAT No. ANSF

34

DRG.No. 9 1 0 2 0 0 0 3 0 0 0 1 0 0 5 0 0 D B
IC SS S AA A C SST

GEN.TOL.MEDIUM/~~COARSE/FINE~~ CLASS TO IS:2102

DRAWING CONVENTION CONFORM TO INDIAN STD. DIMNS IN mm UNLESS OTHERWISE STATED.

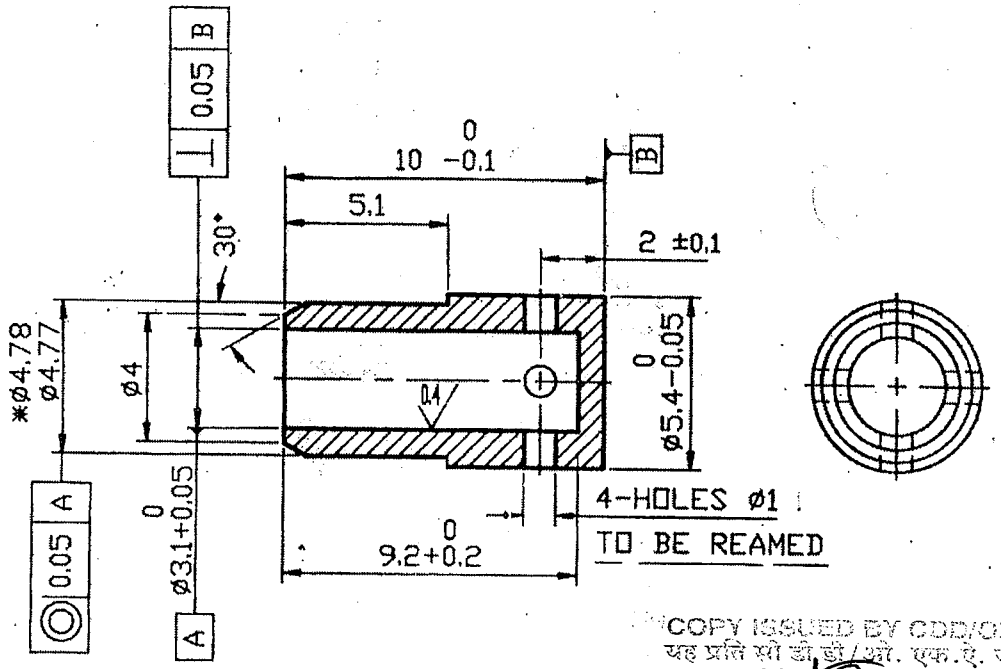

COPY ISSUED BY CDD/OFAJ
यह प्रति श्री डी.डी./श्री. एफ.ए. जे.
द्वारा दी गई है।
दिनांक: क.का.प्र./सी.डी.डी
Date : 14-05-2019 for JWM/CDD

NOTES:

1) DIMNS. APPLY AFTER PLATING.
2) BURRS/SHARP EDGES NOT PERMITTED.
3) * THIS DIMENSION IS INTERFERENCE FIT TO CUP I SRD TO COMPONENT No. 9102 00 03 00 01 009 00DA WITHIN 0.06 TO 0.08 mm IS ACCEPTABLE.

R No.	DATE	AUTHORITY	BRIEF RECORD	ZONE	CD	GD
1	5-7-2000		ALTERNATIVE MATL. ADDED			

SIGN

DRN. SABLE | CHD. | APPD. | DATE: 15/6/98 FOR DIRECTOR

SEALED DATE:

SCALE: 5:1 | EST.MASS: 0.32 g

DESIGN AUTHORITY ARDE

MATERIAL: AL.ALLOY TO SPEC. IS:733-24345 W OR WP. OR BS:1474 GRADE 2014 A

PROTECTIVE FINISH: TO BE ANODISED TO SPEC. DEF 151-1966 TYPE 2

TITLE: HOUSING SRD

DRG.No. 9 1 0 2 0 0 0 3 0 0 0 1 0 0 5 0 0 D B
IC SS S AA A C SST

PART No. | DS CAT No. | AHSP

DRG.No.	9	1	0	2	0	0	0	3	1	0	1	8	0	0	2	0	0	D	B
			IC		SS		S		AA		A		C			SST			

GEN.TOL.MEDIUM/~~COARSE/FINE~~ CLASS TO IS:2102

DRAWING CONVENTION CONFORM TO INDIAN STD. DIMNS IN mm UNLESS OTHERWISE STATED.

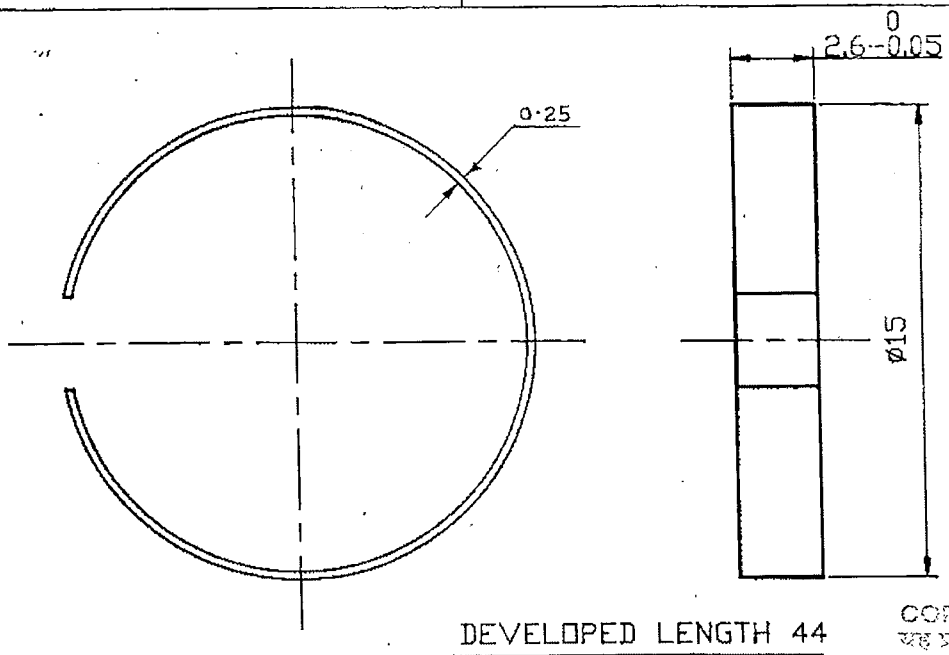

DEVELOPED LENGTH 44

TEST NOTE:

LEAF SPRING WHEN ASSEMBLED IN THE RECESS OF ø11.5 :

1) SPRING END SHOULD BE OVER LAP PROPERLY

2) SPRING SHOULD NOT HAVE PERMANENT SETTING EVEN AFTER 48 HRS.

3) SPRING GAP TO EXPAND TO 10 mm WHEN A LOAD OF 225 ± 15 gm. IS APPLIED

NOTES:

1) BURRS/SHARP EDGES NOT PERMITTED.

2) DIMNS. APPLY AFTER PLATING.

3) HARDNESS 450 ± 50 VPN/5 Kg

COPY ISSUED TO CD/CRAJ यह प्रति श्री ... द्वारा दी गई है। हस्ताक्षर: ... Date: 14-05-2019 for JANSCOD

R No.	DATE	AUTHORITY	BRIEF RECORD	ZONE	CD	GD
2	27.9.99		SL.No. 3 IN NOTES ADDED			
1	27.9.99		SL.No. 3 IN TEST NOTE ADDED.			

SIGN

DRN. SABLE	CHD.	MATERIAL: SPRING STEEL STRIP TO SPEC. BS 970 En 42G (HEAT TREATED CONDITION)
APPD. DATE: 15/6/98	FOR DIRECTOR	PROTECTIVE FINISH: PHOSPHATED TO SPEC. JSS-0465-01-1988 CLASS II OIL FINISH.
SEALED DATE:		
SCALE: 5:1	EST.MASS: 0.2 g	TITLE: LEAF SPRING
DESIGN AUTHORITY ARDE		

DRG.No. 9 1 0 2 0 0 0 3 1 0 1 8 0 0 2 0 0 D B

IC SS S AA A C SST

PART No.	DS CAT No.	AHSP

26

DRG.No.	9	1	0	2	0	0	0	3	0	0	0	1	0	0	2	0	0	D	A
			IC		SS		S		AA		A		C				SST		

GEN.TOL.MEDIUM/~~COARSE/FINE~~ CLASS TO IS:2102

DRAWING CONVENTION CONFORM TO INDIAN STD. DIMNS IN mm UNLESS OTHERWISE STATED.

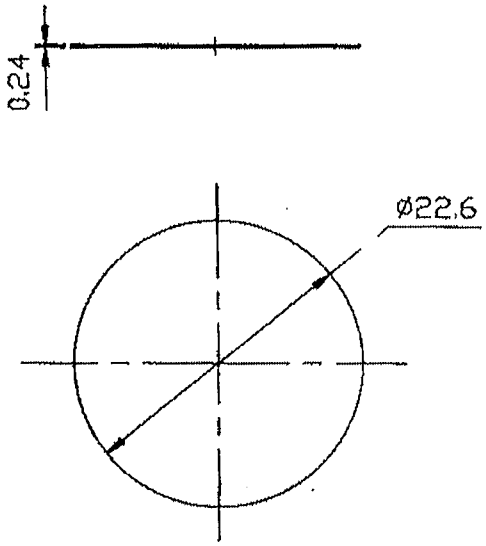

COPY ISSUED BY CDD/CFMJ
यह प्रति सी डी डी/सी. एफ. एम. जे. द्वारा दी गई है।
दिनांक: 14-05-2019
Date : for JWM/CDD

R No.	DATE	AUTHORITY	BRIEF RECORD	ZONE	CD	GD
					SIGN	

DRN. SABLE	CHD.	MATERIAL: PAPER WHITE FINE TO SPEC. JSS 1221.
APPD, DATE: 15/6/98	FOR DIRECTOR	PROTECTIVE FINISH:
SEALED DATE:		
SCALE: 2:1	EST.MASS: 0.09 g	TITLE: PAPER DISC
DESIGN AUTHORITY ARDE		
DRG.No.	9 1 0 2 0 0 0 3 0 0 0 1 0 0 2 0 0 D A (IC SS S AA A C SST)	
PART No.	DS CAT No.	AHSP

GEN.TOL.MEDIUM/~~COARSE/FINE~~ CLASS TO IS:2102	DRAWING CONVENTION CONFORMS TO IS:[illegible] DIMNS IN mm UNLESS OTHERWISE STATED

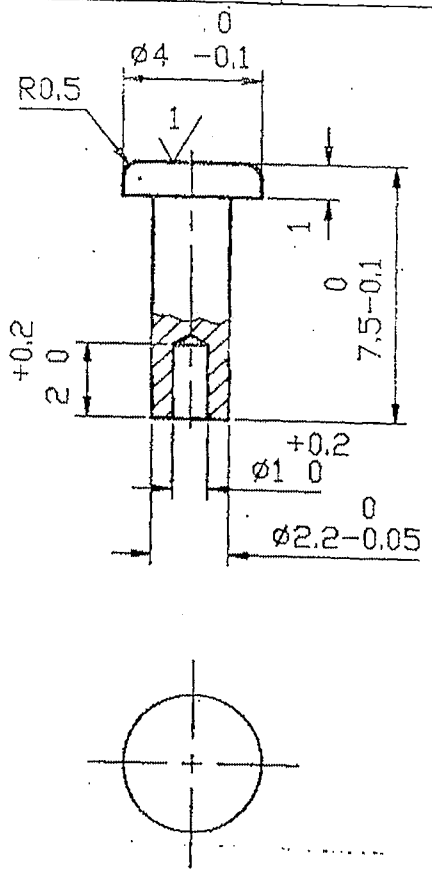

NOTES:

1) DIMNS. APPLY AFTER PLATING

2) TO BE NORMALISED.

3) HARDNESS 170±10 VPN.

COPY ISSUED BY CDTI/CDRU
यह प्रति श्री [illegible] द्वारा श्री गई है।
टिप्पणी: [illegible]
Date : 14-05-2019 for [illegible]

R No.	DATE	AUTHORITY	BRIEF RECORD	ZONE	CD / GD SIGN

DRN. SABLE	CHD.
APPD.	
DATE: 15/6/98 FOR DIRECTOR	
SEALED DATE:	
SCALE: 5:1	EST.MASS: 0.25 g
DESIGN AUTHORITY ARDE	

MATERIAL:

STEEL TO SPEC. IS:2073-1962 OR BS 970 EN8.

PROTECTIVE FINISH: TO BE ZINC PLATED TO SPEC. IS:1573 FeZn5 FOLLOWED BY CHROMATE PASSIVATION.

TITLE:

RIVET

DRG.No. 9 1 0 2 (IC) 0 0 (SS) 0 3 (S) 0 4 (AA) 1 0 (A) 0 0 2 (C) 0 0 D A (SST)

PART No. | DS CAT No. | AHSP

13

GEN.TOL.MEDIUM/~~COARSE/FINE~~ CLASS TO IS:2102	DRAWING CONVENTION CONFORM TO INDIAN STD. DIMNS IN mm UNLESS OTHERWISE STATED.

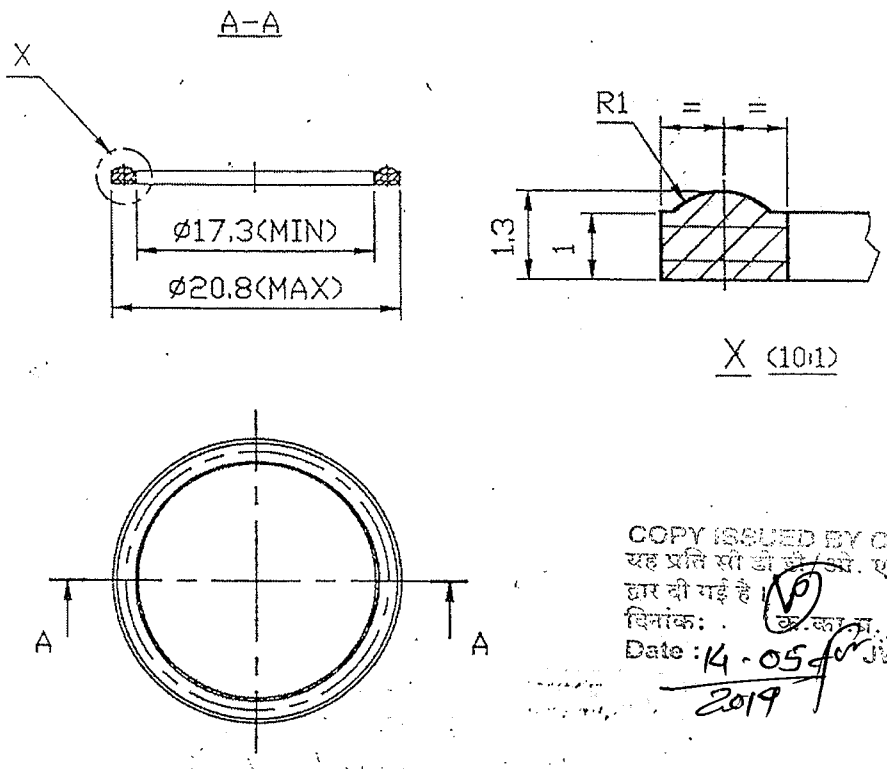

COPY ISSUED BY CDD/OFAJ
यह प्रति सी डी डी/ओ. एफ.ए. जे.
द्वार दी गई है।
दिनांक: . ओ.फा.ज./सी.डी.डी
Date : 14-05-2019 for JWM/CDD

NOTE:

1) DIMENSION OF THE SEALING WASHER SHOULD ENSURE PROPER FITMENT IN THE GROOVE OF BODY UPPER TO COMPONENT No. 9102 00 03 10 17 001 00DA

2) SEALING WASHER SHOULD BE FREE FROM ANY FLASHES.

R No.	DATE	AUTHORITY	BRIEF RECORD	ZONE	CD	GD
					SIGN	

DRN. SABLE	CHD.	MATERIAL: NEOPRENE TO SPEC. IND/ME/884(PROV) CLASS C-5
APPD, DATE: 15/6/98	EDR DIRECTOR	PROTECTIVE FINISH:
SEALED DATE:		
SCALE: 2:1	EST.MASS: 0.16 g	TITLE: SEALING WASHER
DESIGN AUTHORITY ARDE		

DRG.No. 9 1 0 2 (IC) 0 0 (SS) 0 3 (S) 1 0 (AA) 1 7 (A) 0 0 2 (C) 0 0 D A (SST)

PART No.	DS CAT No.	AHSP

DRG.No.	9	1	0	2	0	0	0	3	0	1	0	5	0	0	0	0	0	0	D	B
	IC				SS		S		AA		A		C				SST			

GEN.TOL.MEDIUM/~~COARSE/FINE~~ CLASS TO IS:2102

DRAWING CONVENTION CONFORM TO INDIAN STD.
DIMNS IN mm UNLESS OTHERWISE STATED.

COPY ... Date: 14-05-2019 for JWM/CCE

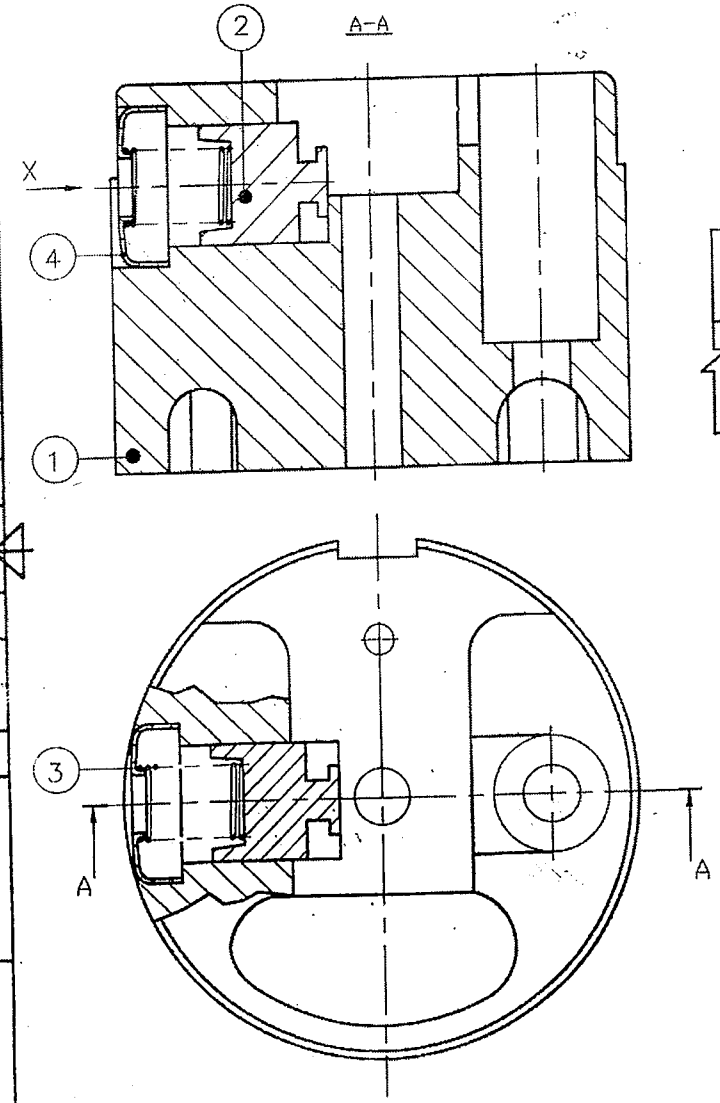

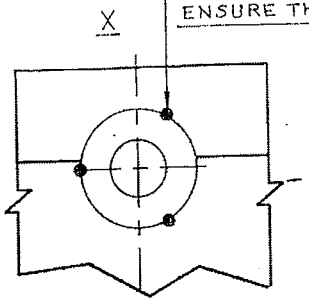

ITEM 4 TO BE SECURED IN POSITION
BY STABBING AT THREE EQUISPACED PLACES AS SHOWN.
ENSURE THAT IT DOES NOT PROTRUDE OUT OF DIA 22·7-0·1

ITEM LIST

ITEM	QUANTITY	DESCRIPTION	REFERENCE
1	1	SHUTTER HOUSING	9102 00 03 01 05 001 00DB
2	1	CENTRIFUGAL BOLT	9102 00 03 01 05 002 00DA
3	1	SPRING CENTRIFUGAL BOLT	9102 00 03 01 05 003 00DB
4	1	COVER CENTRIFUGAL BOLT	9102 00 03 01 05 004 00DA

R No.	DATE	AUTHORITY	BRIEF RECORD	ZONE	CD	GD
1	13-7-2000		COMPONENT DRG No. OF Sr. No. 1, 5 CHANGED			

SIGN

DRN. SABLE
CHD.
APPD.
DATE: 15/6/98 FOR DIRECTOR
SEALED
DATE:
SCALE: 5:1
EST.MASS:
DESIGN AUTHORITY ARDE
MATERIAL:
PROTECTIVE FINISH:
TITLE: SHUTTER HOUSING & CENTRIFUGAL BOLT ASSY.

DRG.No. 9 1 0 2 (IC) 0 0 (SS) 0 3 (S) 0 1 (AA) 0 5 (A) 0 0 0 (C) 0 0 D B (SST)

PART No.
DS CAT.No.
AHSP

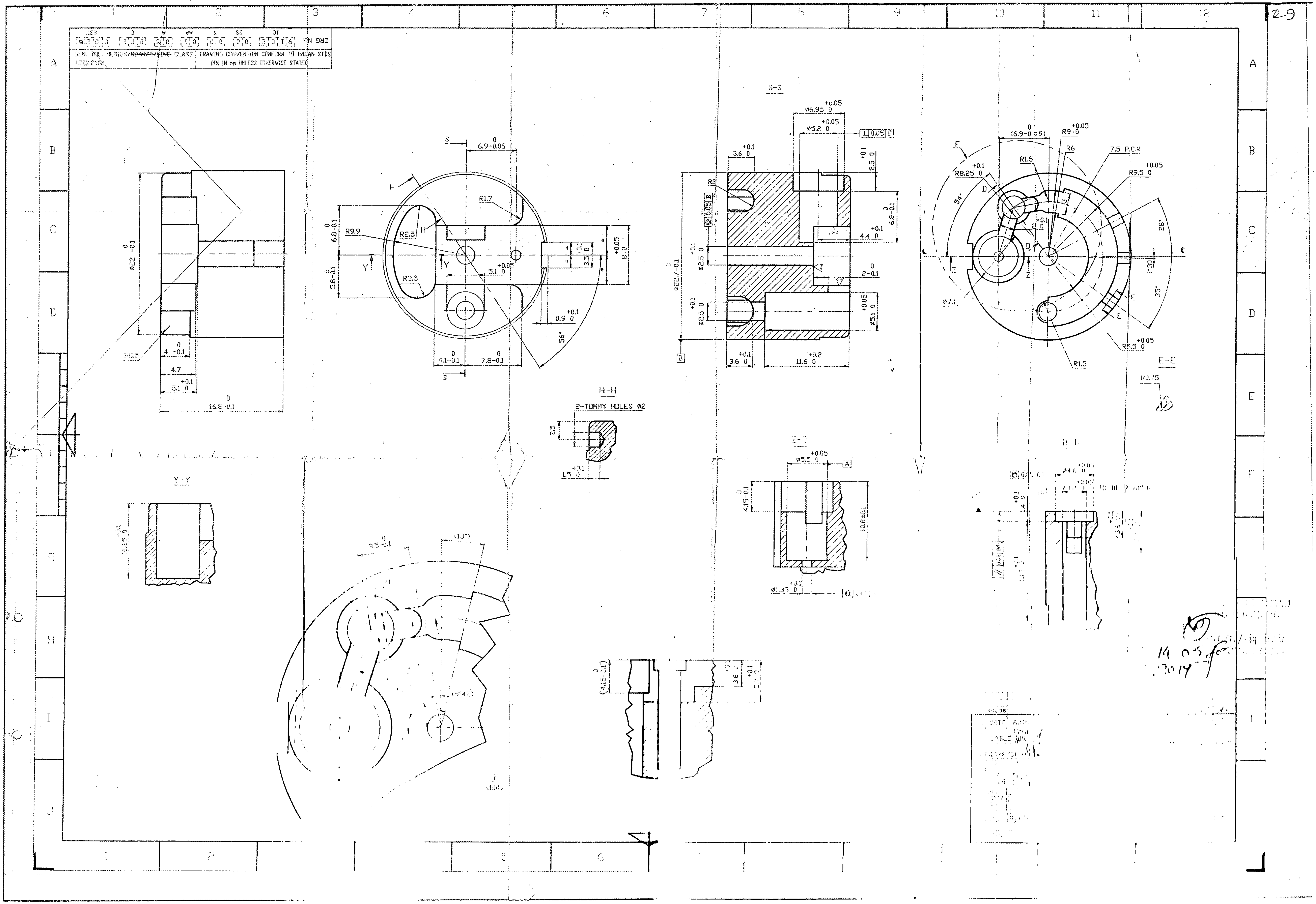

DRG No.
GEN. TOL. MEDIUM/COARSE/FINE CLASS
IS:2102
DRAWING CONVENTION CONFORM TO INDIAN STDS
DIM IN mm UNLESS OTHERWISE STATED
S-S
E-E
H-H
2-TOMMY HOLES Ø2
Y-Y
Z-Z
7.5 P.C.R
R9.5
R9.9
R8.25
R1.5
R1.7
R2.5
R6
R0.75
Ø22.7-0.1
Ø22-0.1
16.8-0.1
6.9-0.05
(6.9-0.05)
4.1-0.1
7.8-0.1
6.8-0.1
5.8-0.1
11.6
3.6
10.8±0.1
4.15-0.1
56°
54°
35°
28°
1°30'
29

COPY ISSUED BY CDE/OFAJ A
यह प्रति सी डी ई/ओ. एफ. ए. जे.
द्वारा दी गई है
दिनांक: सी.का.प्र./सी.डी.ई
Date : 14-05-2019 JWM/CDE

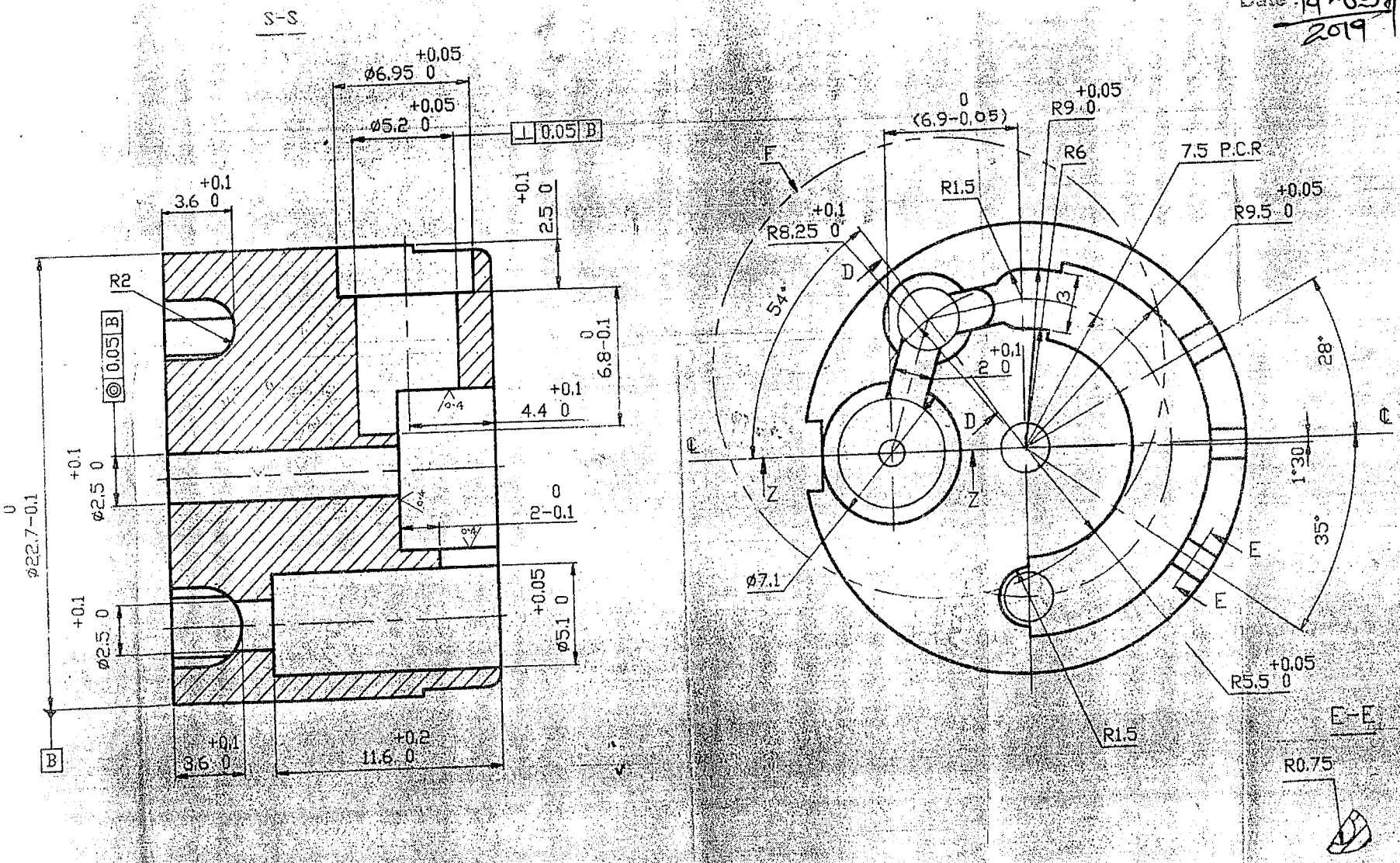

SHUTTER HOUSING

DRG. No. 910200030105001 00DB

DRG.No.	9	1	0	2	0	0	0	3	0	0	0	1	0	1	3	0	0	D	B
		IC			SS		S		AA		A		C			SST			

GEN.TOL. ~~MEDIUM~~/COARSE/~~FINE~~ CLASS TO IS:2102

DRAWING CONVENTION CONFORM TO INDIAN STD. DIMNS IN mm UNLESS OTHERWISE STATED.

TOLERANCE ON SPRING PARAMETERS SPEC. IS:7907 Pt.II

COPY ISSUED BY BOD/OFAJ
यह प्रति का जी डी ओ. एफ.ए. ज.
द्वारा दी गई है।
दिनांक: क.का.प्र./सी.डी.डी
Date : 14-05-2019 for JWM/CDD

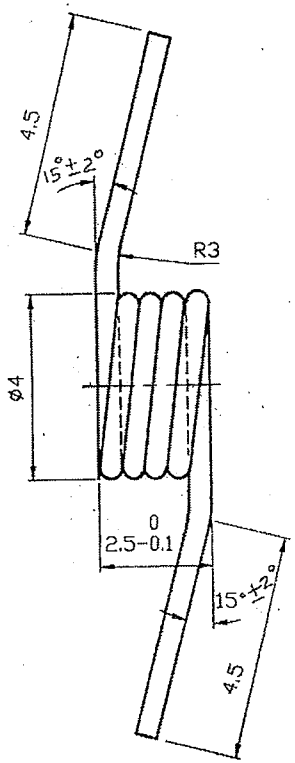

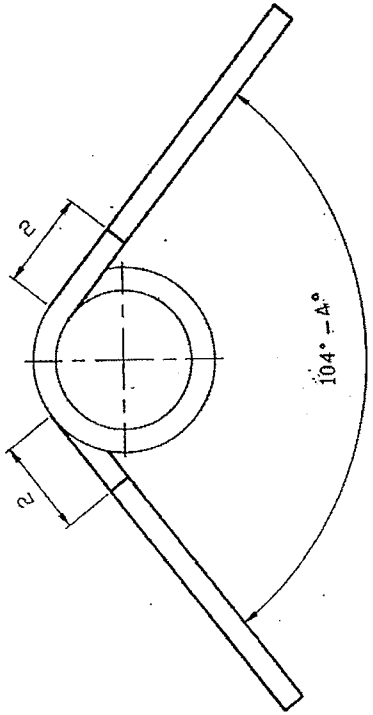

NOTES:

1) TORQUE 1.47 Kg mm FOR 57° ANGULAR DEFLECTION.

2) DIMNS. APPLY AFTER PLATING.

WIRE DIA ---------- 0.5

No. OF EFFECTIVE COILS ----- 4

WOUND ---------- L.H.

R No.	DATE	AUTHORITY	BRIEF RECORD	ZONE	CD SIGN	GD SIGN
1	8-10-99		GEN TOL: MEDIUM DELETED COARSE ADDED			
	8-10-99		TOLS 104°-4°, 15°±2° ADDED D=4, C=2.			

DRN. SABLE — CHD. — APPD. DATE: 15/6/98 FOR DIRECTOR — SEALED DATE:

MATERIAL: SPRING STEEL WIRE TO SPEC. IS:4454 Pt.I Gd.III

PROTECTIVE FINISH: TO BE CADMIUM PLATED TO SPEC. IS:1572 Cd8 FOLLOWED BY CHROMATE PASSIVATION.

SCALE: 10:1 — EST.MASS: 0.09 g

TITLE: SHUTTER SPRING

DESIGN AUTHORITY ARDE

PART No. — DS CAT.No. — AHSP

GEN.TOL.MEDIUM/~~COARSE/FINE~~ CLASS TO IS:2102	DRAWING CONVENTION CONFORM TO INDIAN STD. DIMNS IN mm UNLESS OTHERWISE STATED.

DRG.No. 9 1 0 2 (IC) 0 0 (SS) 0 3 (S) 0 0 (AA) 0 1 (A) 0 1 2 (C) 0 0 D A (SST)

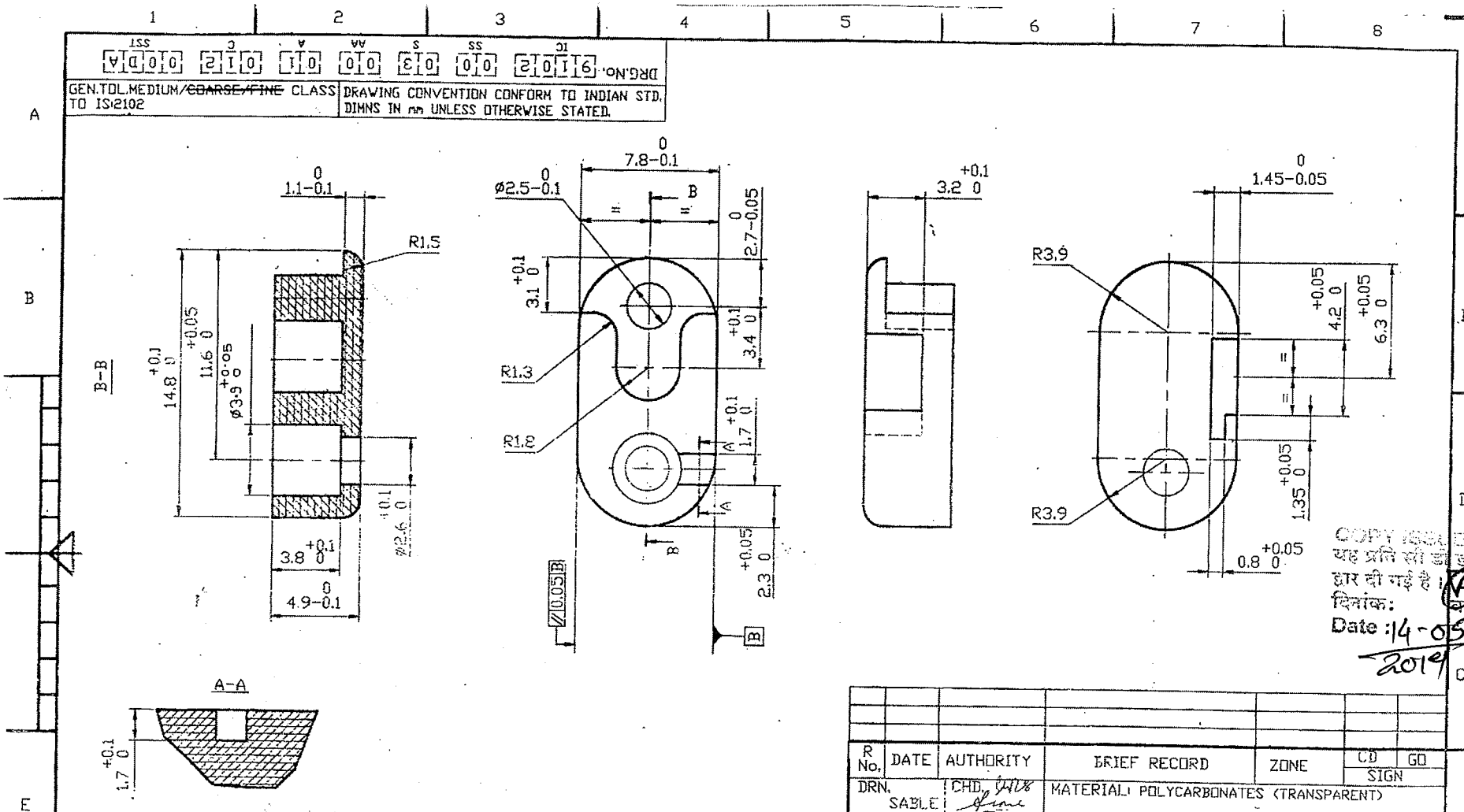

NOTE:

UNEVEN SURFACE FLASHES OR ANY OTHER DEFECT DUE TO MOULDING IS NOT PERMITTED.

R No.	DATE	AUTHORITY	BRIEF RECORD	ZONE	CD	GD
					SIGN	

DRN. SABLE	CHD.	MATERIAL: POLYCARBONATES (TRANSPARENT)
APPD. DATE: 15/6/98 FOR DIRECTOR		PROTECTIVE FINISH:
SEALED DATE:		
SCALE 5:1	EST.MASS 0.37 g	TITLE SHUTTER
DESIGN AUTHORITY ARDE		
DRG.No. 9 1 0 2 (IC) 0 0 (SS) 0 3 (S) 0 0 (AA) 0 1 (A) 0 1 2 (C) 0 0 D A (SST)		
PART No.	DS CAT.No.	AHSP

COPY ISSUED BY CDD/OFAJ
यह प्रति सी डी डी ओ. एफ.ए. जे. द्वारा दी गई है।
दिनांक: सी.डी.प्र./सी.डी.डी
Date: 14-05-2019 for JWM/CDD

DRG.No.	9	1	0	2	0	0	0	3	0	1	0	4	0	0	1	0	0	D	B
			IC		SS		S		AA		A		C					SST	

GEN.TOL.MEDIUM/~~COARSE/FINE~~ CLASS TO IS:2102

DRAWING CONVENTION CONFORM TO INDIAN STD. DIMNS IN mm UNLESS OTHERWISE STATED.

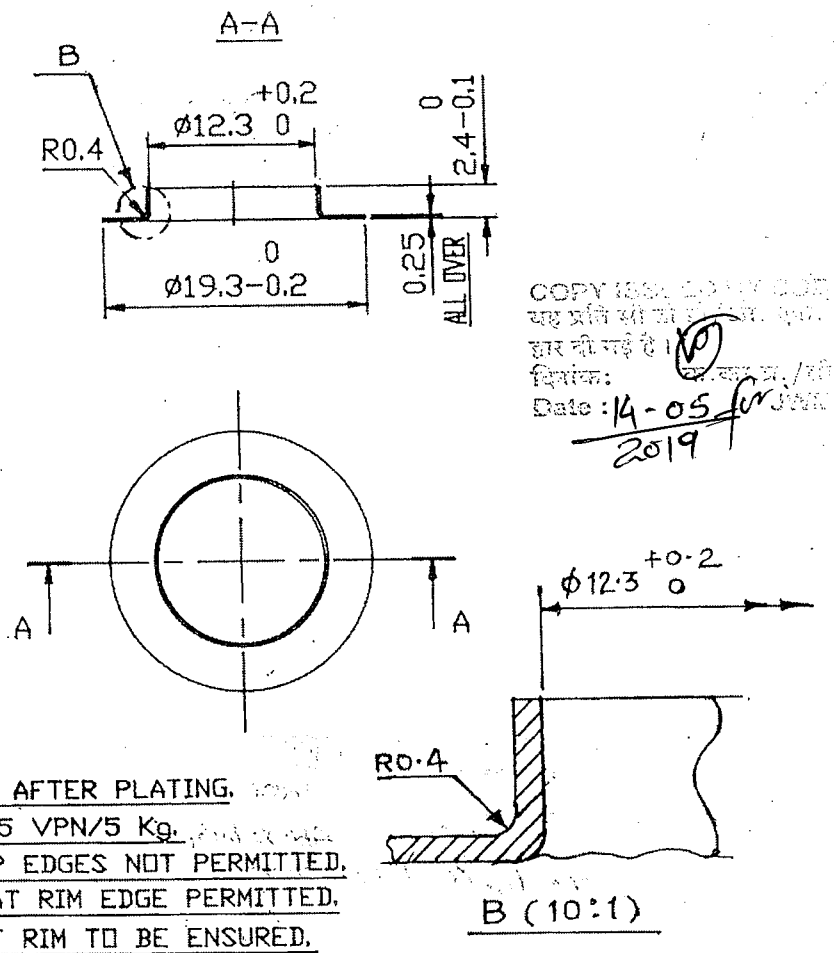

NOTES:

1) DIMNS. APPLY AFTER PLATING.
2) HARDNESS 175 VPN/5 Kg.
3) BURRS/SHARP EDGES NOT PERMITTED.
4) NO CRACKS AT RIM EDGE PERMITTED.
5) FLATNESS OF RIM TO BE ENSURED.

R No.	DATE	AUTHORITY	BRIEF RECORD	ZONE	CD	GD
1	5/5/99		ENLARGED VIEW ADDED	B-2	SIGN	

DRN. SABLE | CHD.

APPD. DATE: 15/6/98 FOR DIRECTOR

SEALED DATE:

SCALE: 2:1 | EST.MASS: 0.45 g

DESIGN AUTHORITY ARDE

MATERIAL: STEEL SHEET TO SPEC. IS:513-1986 Gd. DD

PROTECTIVE FINISH: TO BE NICKEL PLATED TO SERVICE Gd.No.3 TO SPEC. IS:1068-1985. OR ELECTROLESS NICKEL PLATING WITH BOND STRENGHT MIN.2800 Kg/Cm.²

TITLE:

SPACER

DRG.No. 9 1 0 2 0 0 0 3 0 1 0 4 0 0 1 0 0 D B

(31) 3

DRG.No. 9 1 0 2 (IC) 0 0 (SS) 0 3 (S) 0 1 (AA) 0 5 (A) 0 0 3 (C) 0 0 D B (SST)

GEN.TOL.MEDIUM/~~COARSE/FINE~~ CLASS TO IS:2102

DRAWING CONVENTION CONFORM TO INDIAN STD. DIMNS IN mm UNLESS OTHERWISE STATED.

TOLERANCE ON SPRING TO SPEC. IS:7906 Pt.II

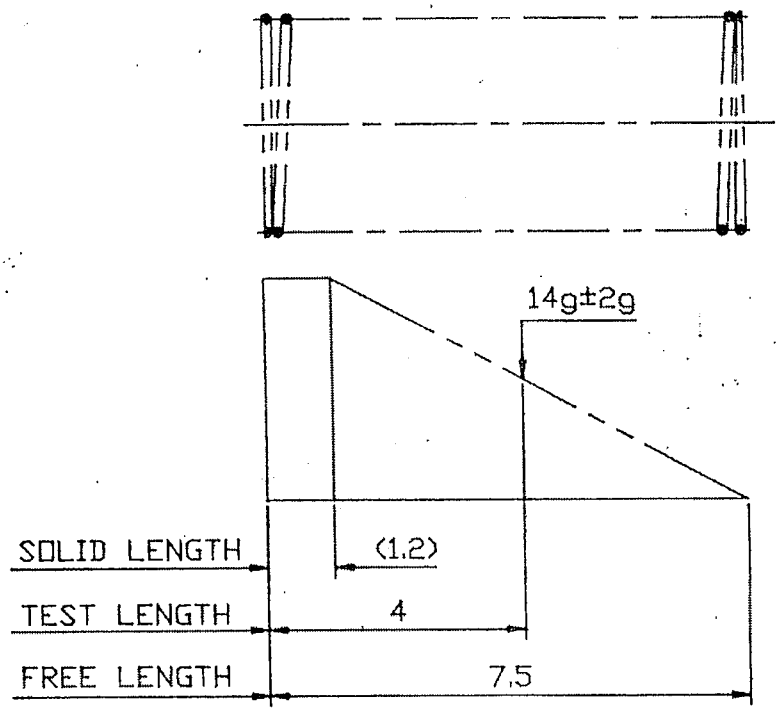

WIRE DIA — 0.16
OUT SIDE DIA — 3.5
NO. OF EFFECTIVE COILS — 4.5
WOUND — L.H.
END COILS TO BE CLOSED IN AND SQUARE TO THE AXIS.

COPY ISSUED BY CODRAW
यह प्रति मूल से प्रतिलिपि की गई है।
द्वारा की गई है।
दिनांक:
Date: 14-05-2019 for

R No.	DATE	AUTHORITY	BRIEF RECORD	ZONE	CD	GD
1	14-6-99		MATL Pt IV. Gr I OR II WAS Pt 1			

SIGN

DRN. SABLE
CHD.
APPD.
DATE: 15/6/98 FOR DIRECTOR
SEALED DATE:

MATERIAL: SPRING STEEL WIRE TO SPEC. IS:4454 Pt.IV GRADE I OR II
PROTECTIVE FINISH:

SCALE: 10:1
EST.MASS: 0.01 g
DESIGN AUTHORITY ARDE

TITLE: SPRING CENTRIFUGAL BOLT

DRG.No. 9 1 0 2 (IC) 0 0 (SS) 0 3 (S) 0 1 (AA) 0 5 (A) 0 0 3 (C) 0 0 D B (SST)

PART No. | DS CAT No. | AHSP

(31)

DRG.No. 9 1 0 2 0 0 0 3 0 0 0 1 0 1 0 0 D A
(IC SS S AA A C SST)

GEN.TOL.MEDIUM/~~COARSE/FINE~~ CLASS TO IS:2102

DRAWING CONVENTION CONFORM TO INDIAN STD. DIMNS IN mm UNLESS OTHERWISE STATED.

TOLERANCE ON SPRING TO SPEC. IS:7906 Pt.II

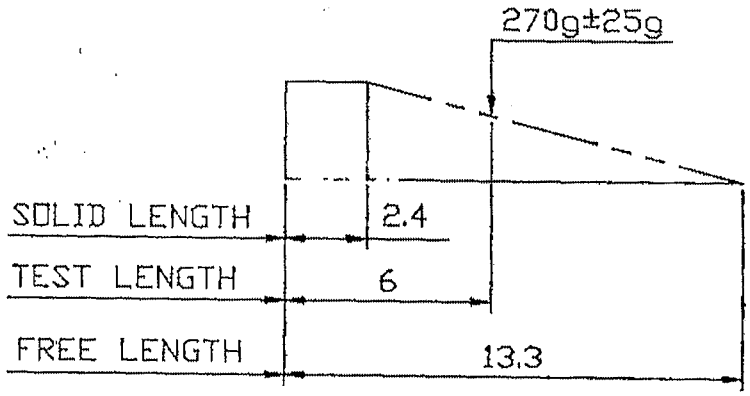

OUT SIDE DIA ---------- 2.8

WIRE DIA ---------- 0.25

No. OF EFFECTIVE COILS ------ 6.5

WOUND ---------- L.H.

END COILS TO BE CLOSED IN AND SQUARE TO THE AXIS.

NOTE:

1) DIMNS. APPLY AFTER PLATING.

COPY ISSUED BY CDE/CFA
यह प्रति श्री डी.डी./सी. एफ.ए. के. द्वारा दी गई है।
दिनांक: डी.एफ.ए./सी.डी.डी.
Date: 14-05-2019 for JWM/CDD

R No.	DATE	AUTHORITY	BRIEF RECORD	ZONE	CD	GD
					SIGN	

DRN. SABLE

CHD.

APPD. DATE: 15/6/98 FOR DIRECTOR

SEALED DATE:

SCALE: 5:1

EST.MASS: 0.03 g

DESIGN AUTHORITY ARDE

MATERIAL: SPRING STEEL WIRE TO SPEC. IS:4454 Pt.I Gd.3

PROTECTIVE FINISH: TO BE CADMIUM PLATED TO SPEC. IS:1572 Cd8 FOLLOWED BY CHROMATE PASSIVATION.

TITLE: SPRING I.D.

DRG.No. 9 1 0 2 0 0 0 3 0 0 0 1 0 1 0 0 D A
(IC SS S AA A C SST)

PART No.

DS CAT No.

AHSP

37

DRG.No. 9 1 0 2 / 0 0 / 0 3 / 0 0 / 0 1 / 0 0 / 0 8 / 0 0 D A

GEN.TOL.MEDIUM/~~COARSE/FINE~~ CLASS TO IS:2102

DRAWING CONVENTION CONFORM TO INDIAN STD. DIMNS IN mm UNLESS OTHERWISE STATED.

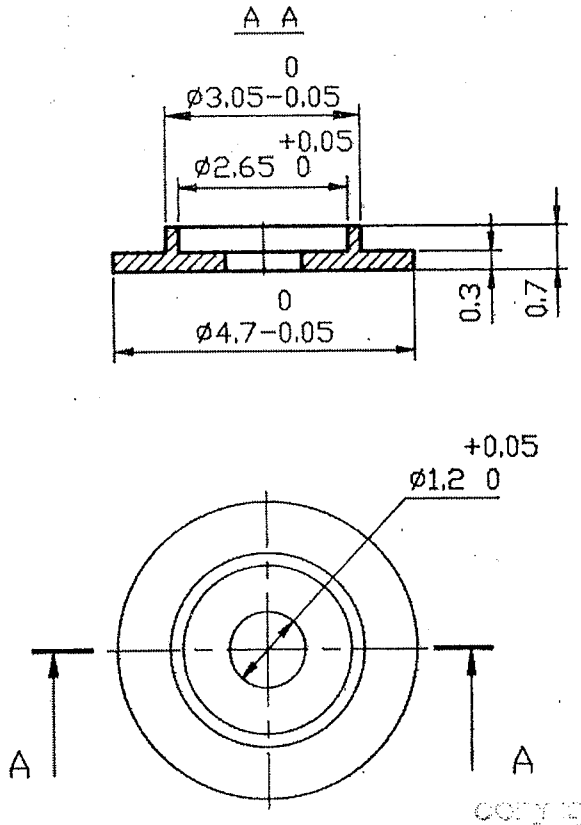

NOTE:
FLASHES NOT PERMITTED.

COPY VERIFIED BY GDD/OFAJ
यह प्रति की जाँच डी/ओ. एफ.ए. जे. द्वारा की गई है।
दिनांक: 14-05-2019
Date: 14-05-2019 for JWM/CDD

R No.	DATE	AUTHORITY	BRIEF RECORD	ZONE	CD	GD
					SIGN	

DRN. SABLE
CHD.
APPD.
DATE: 15/6/98 FOR DIRECTOR
SEALED
DATE:
SCALE: 10:1
EST.MASS: 0.01 g
DESIGN AUTHORITY ARDE

MATERIAL: NYLON 6/6

PROTECTIVE FINISH:

TITLE:

SPRING SEATING SRD

DRG.No. 9 1 0 2 / 0 0 / 0 3 / 0 0 / 0 1 / 0 0 / 0 8 / 0 0 D A

PART No.
DS CAT No.
AHSP

36

DRG.No. 9 1 0 2 IC 0 0 SS 0 3 S 0 0 AA 0 1 A 0 0 C 7 0 0 DA SST

GEN.TOL.MEDIUM/~~COARSE/FINE~~ CLASS TO IS:2102

DRAWING CONVENTION CONFORM TO INDIAN STD. DIMNS IN mm UNLESS OTHERWISE STATED.

TOLERANCES ON SPRING SPEC. IS:7906 Pt.II

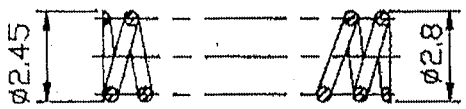

1500g±100g

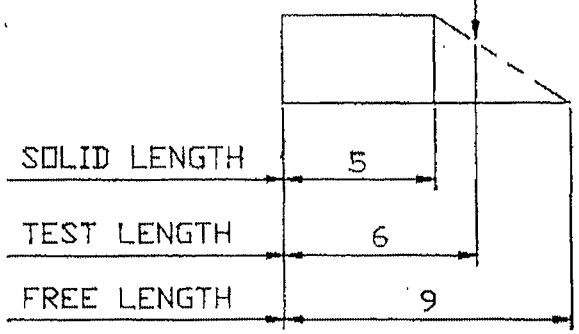

COPY ISSUED BY CDR/DFAJ
यह प्रति श्री जी ने जी. एक.ई. जे. द्वारा दी गई है।
दिनांक:
Date: 14-05-2019 for

WIRE DIA ---------- 0.45

No. OF EFFECTIVE COILS ------ 8

WOUND ---------- R.H.

END COILS TO BE CLOSED IN & SQUARE TO THE AXIS.

NOTES:

1) THERE SHOULD NOT BE ANY PERMANENT SET WHEN IT IS COMPRESSED AND KEPT 96 HOURS.

2) DIMNS. APPLY AFTER PLATING.

R No.	DATE	AUTHORITY	BRIEF RECORD	ZONE	CD	GD
					SIGN	

DRN. SABLE

CHD.

APPD.

DATE: 15/6/98 FOR DIRECTOR

SEALED DATE:

MATERIAL: SPRING STEEL WIRE TO SPEC. IS:4454 Pt.I Gd.3

PROTECTIVE FINISH: TO BE CADMIUM PLATED TO SPEC. IS:1572 Cd8 FOLLOWED BY CHROMATE PASSIVATION

SCALE: 5:1

EST.MASS: 0.1 g

TITLE: SPRING SRD

DESIGN AUTHORITY ARDE

DRG.No. 9 1 0 2 IC 0 0 SS 0 3 S 0 0 AA 0 1 A 0 0 C 7 0 0 DA SST

PART No.

DS CAT No.

AHSP

26

1	2	3	4

DRG No. 9 1 0 2 (IC) 0 0 (SS) 0 3 (S) 0 4 (AA) 1 1 (A) 0 0 2 (C) 0 0 D A (SST)

GEN.TOL.MEDIUM/~~COARSE/FINE~~ CLASS TO IS:2102

DRAWING CONVENTION CONFORM TO INDIAN STD.
DIMNS IN mm UNLESS OTHERWISE STATED.

TOLERANCE ON SPRING SPEC. IS:7906 Pt.II

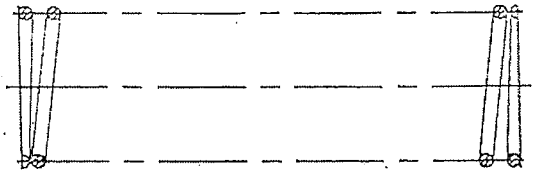

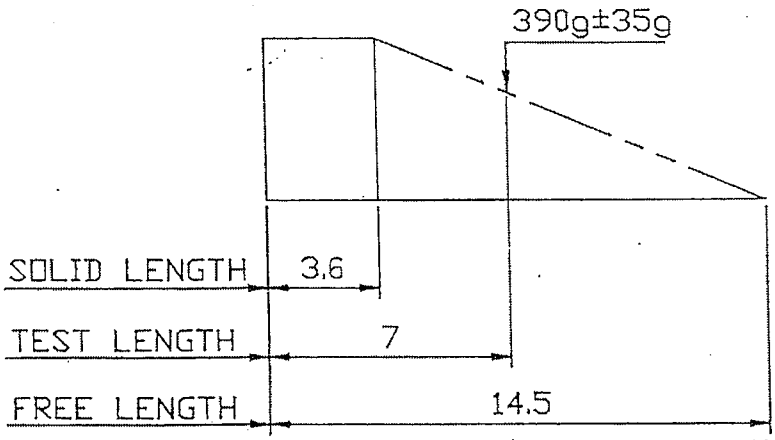

COPY ISSUED BY CDE (DGAQA) यह प्रति सत्य प्रति है। डी. एम. ए. पी. द्वारा की गई है। हस्ताक्षर: Date: 14-05-19 for JWM LTD

OUT SIDE DIA ---------- 4.75
WIRE DIA ---------- 0.40
No. OF EFFECTIVE COILS ---6
WOUND ---------- L.H.
END COILS TO BE CLOSED IN AND SQUARE TO THE AXIS

NOTE:
1) DIMNS. APPLY AFTER PLATING.

R No.	DATE	AUTHORITY	BRIEF RECORD	ZONE	CD	GD
					SIGN	

DRN. SABLE
CHD.
APPD.
DATE: 15/6/98 FOR DIRECTOR
SEALED
DATE:

MATERIAL: SPRING STEEL WIRE TO SPEC. IS:4454 Pt.I Gd.3

PROTECTIVE FINISH: TO BE CADMIUM PLATED TO SPEC. IS:1572 Cd8. FOLLOWED BY CHROMATE PASSIVATION.

SCALE: 5:1
EST.MASS: 0.12 g

TITLE:

SPRING STRIKER

DESIGN AUTHORITY ARDE

DRG.No. 9 1 0 2 (IC) 0 0 (SS) 0 3 (S) 0 4 (AA) 1 1 (A) 0 0 2 (C) 0 0 D A (SST)

PART No. | DS CAT No. | AHSP

DRG.No. 9 1 0 2 (IC) 0 0 (SS) 0 3 (S) 0 0 (AA) 0 1 (A) 0 1 1 (C) 0 0 D A (SST)

GEN.TOL.MEDIUM/~~COARSE/FINE~~ CLASS TO IS:2102

DRAWING CONVENTION CONFORM TO INDIAN STD. DIMNS IN mm UNLESS OTHERWISE STATED.

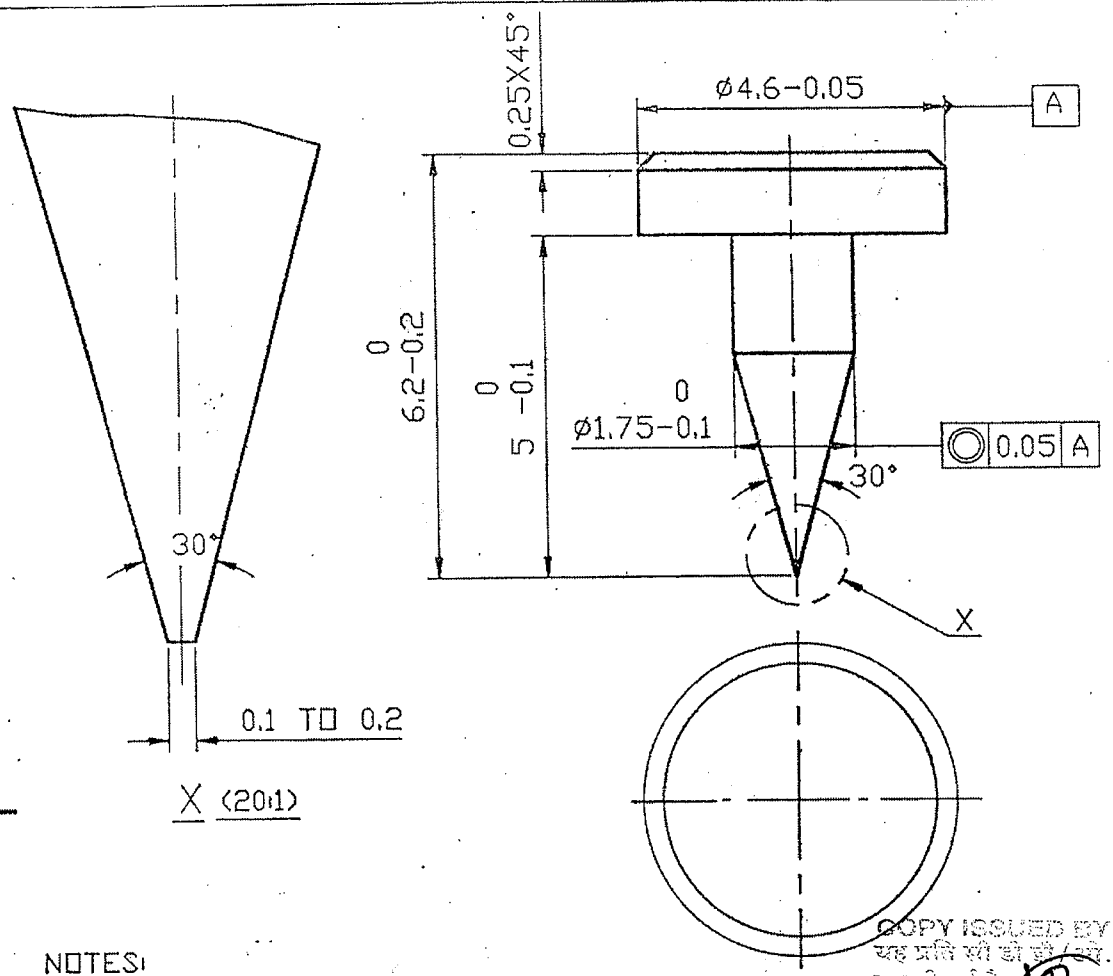

NOTES:

1) DIMNS. APPLY AFTER PLATING.

2) BURRS/SHARP EDGES NOT PERMITTED.

COPY ISSUED BY CDD/DFAJ
यह प्रति श्री डी.डी./एम. एन.ई. जे. द्वारा दी गई है।
टिप्पणी: NO
Date: 14-05-19 for JWM/CDD

R No.	DATE	AUTHORITY	BRIEF RECORD	ZONE	CD	GD
					SIGN	

DRN. SABLE — CHD. [signature]

APPD. — DATE: 15/6/98 — FOR DIRECTOR

SEALED DATE:

SCALE: 10:1 — EST.MASS: 0.18 g

DESIGN AUTHORITY ARDE

MATERIAL: STEEL TO SPEC. IS:2073-1962 C40 OR BS 970 Pt.I Gd.080 M40 IN COLD DRAWN CONDITION.

PROTECTIVE FINISH: TO BE NICKEL PLATED TO SERVICE Gd.No.3 TO SPEC. IS:1068-1985. OR ELECTROLESS PLATING WITH BOND STRENGTH MIN.2800 Kg/Cm²

TITLE:

STRIKER I.D.

DRG.No. 9 1 0 2 (IC) 0 0 (SS) 0 3 (S) 0 0 (AA) 0 1 (A) 0 1 1 (C) 0 0 D A (SST)

PART No. — DS CAT No. — AHSP

1	2	3	4	5	6	7

DRG.No. 9 1 0 2 (IC) 0 0 (SS) 0 3 (S) 0 4 (AA) 1 1 (A) 0 0 1 (C) 0 0 0 0 (SST)

GEN.TOL:MEDIUM/~~COARSE/FINE~~ CLASS TO IS:2102

DRAWING CONVENTION CONFORM TO INDIAN STD. DIMNS IN mm UNLESS OTHERWISE STATED.

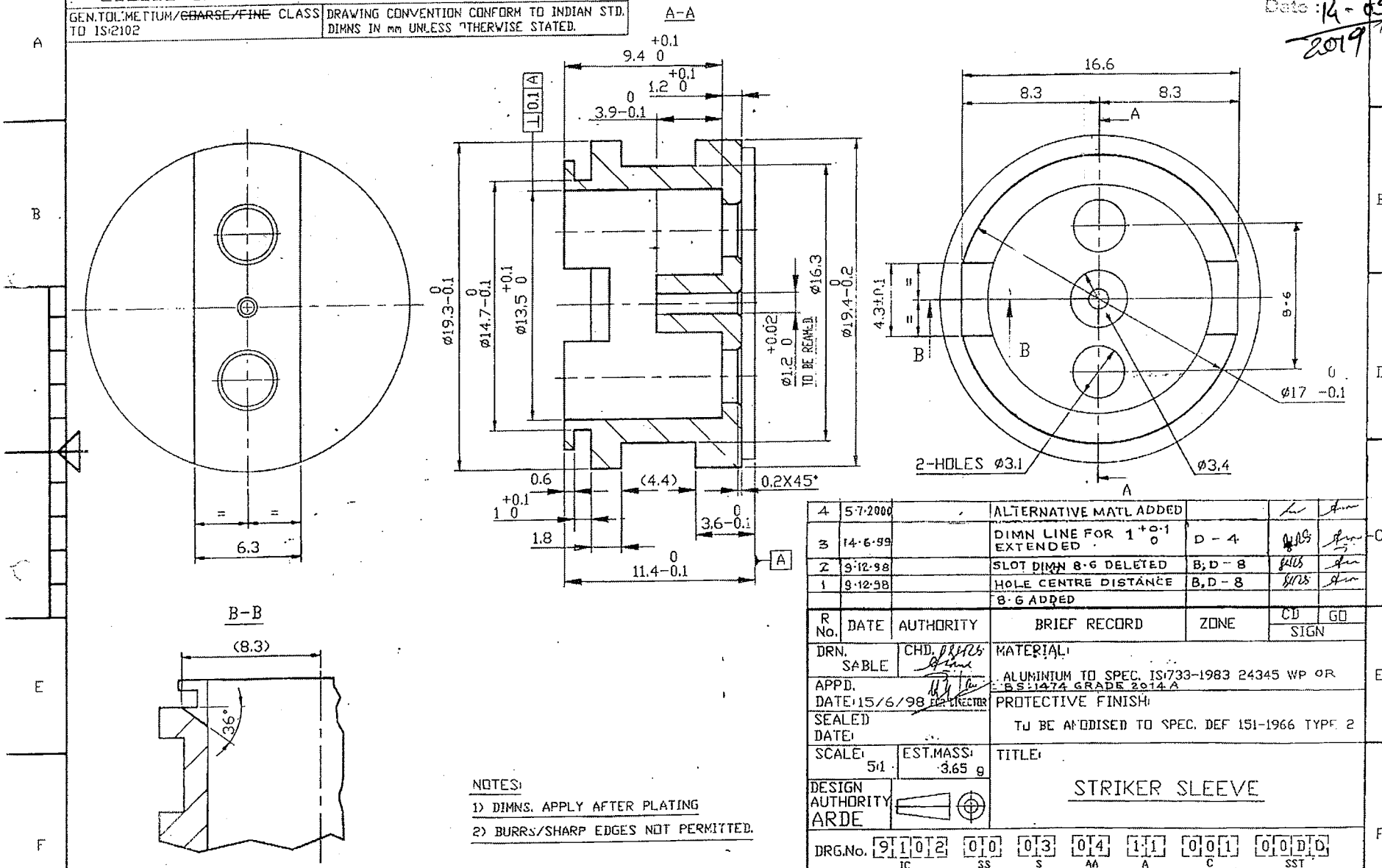

NOTES:

1) DIMNS. APPLY AFTER PLATING

2) BURRS/SHARP EDGES NOT PERMITTED.

R No.	DATE	AUTHORITY	BRIEF RECORD	ZONE	CD	GD
4	5·7·2000		ALTERNATIVE MATL ADDED			
3	14·6·99		DIMN LINE FOR 1 +0.1 0 EXTENDED	D - 4		
2	9·12·98		SLOT DIMN 8·6 DELETED	B, D - 8		
1	9·12·98		HOLE CENTRE DISTANCE 8·6 ADDED	B, D - 8		

SIGN

DRN. SABLE

CHD.

APPD. DATE: 15/6/98 DGA-DIRECTOR

SEALED DATE:

SCALE: 5:1

EST.MASS: 3.65 g

DESIGN AUTHORITY ARDE

MATERIAL: ALUMINIUM TO SPEC. IS:733-1983 24345 WP OR BS:1474 GRADE 2014 A

PROTECTIVE FINISH: TO BE ANODISED TO SPEC. DEF 151-1966 TYPE 2

TITLE: STRIKER SLEEVE

DRG.No. 9 1 0 2 (IC) 0 0 (SS) 0 3 (S) 0 4 (AA) 1 1 (A) 0 0 1 (C) 0 0 0 0 (SST)

PART No.

DS CAT.No.

AHSP

COPY ... BY ... Date: 14-05-2019 for ...

GEN.TOL.MEDIUM/~~COARSE/FINE~~ CLASS TO IS8102

DRAWING CONVENTION CONFORM TO INDIAN STD. DIMNS IN mm UNLESS OTHERWISE STATED.

DRG.No. 9 1 0 2 0 0 0 3 0 4 1 1 0 0 0 0 0 D B

A-A

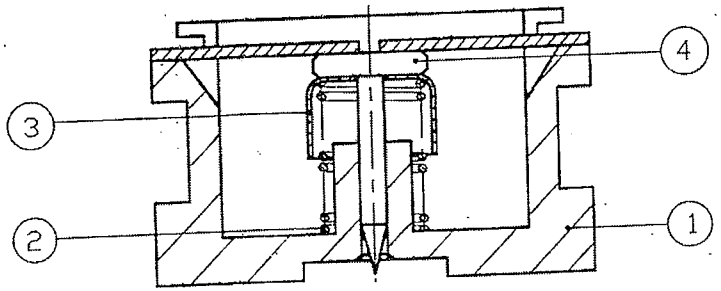

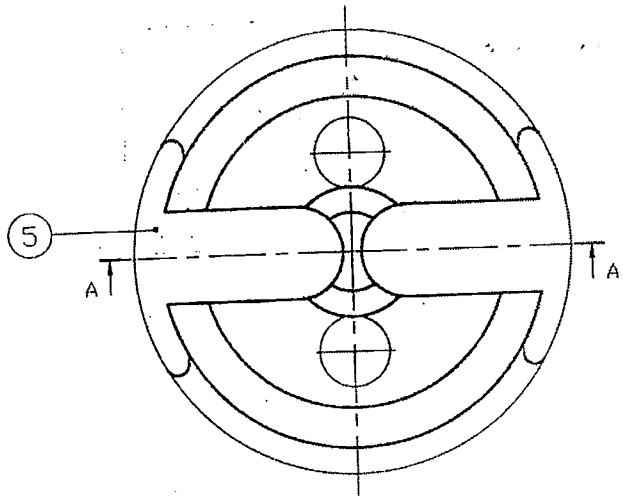

COPY ISSUED BY CDD/OFAJ
Date : 14-05-2019 for

ITEM LIST

ITEM	QUANTITY	DESCRIPTION	REFERENCE
1	1	STRIKER SLEEVE	9102 00 03 04 11 001 00DD
2	1	SPRING STRIKER	9102 00 03 04 11 002 00DA
3	1	CAP SPRING STRIKER	9102 00 03 04 11 003 00DB
4	1	STRIKER	9102 00 03 04 11 004 00DA
5	2	STRIP STRIKER	9102 00 03 04 11 005 00DA

R No.	DATE	AUTHORITY	BRIEF RECORD	ZONE	CD SIGN	GD SIGN
1	13.7.2000		COMPONENTS DRG No. OF Sr. No. 1, 3 CHANGED			

DRN. SABLE

CHD.

APPD. DATE: 15/6/98 FOR DIRECTOR

SEALED DATE:

SCALE: 5:1

EST.MASS

MATERIAL:

PROTECTIVE FINISH:

TITLE: STRIKER SLEEVE ASSY.

DESIGN AUTHORITY ARDE

DRG.No. 9 1 0 2 0 0 0 3 0 4 1 1 0 0 0 0 0 D B

IC SS S AA A C SST

PART No.

DS CAT.No.

AHSP

DRG.No. 9 1 0 2 (IC) 0 0 (SS) 0 3 (S) 0 4 (AA) 1 1 (A) 0 0 (C) 4 0 0 (SST) D A

22

GEN.TOL.MEDIUM/~~COARSE/FINE~~ CLASS TO IS:2102

DRAWING CONVENTION CONFORM TO INDIAN STD. DIMNS IN mm UNLESS OTHERWISE STATED.

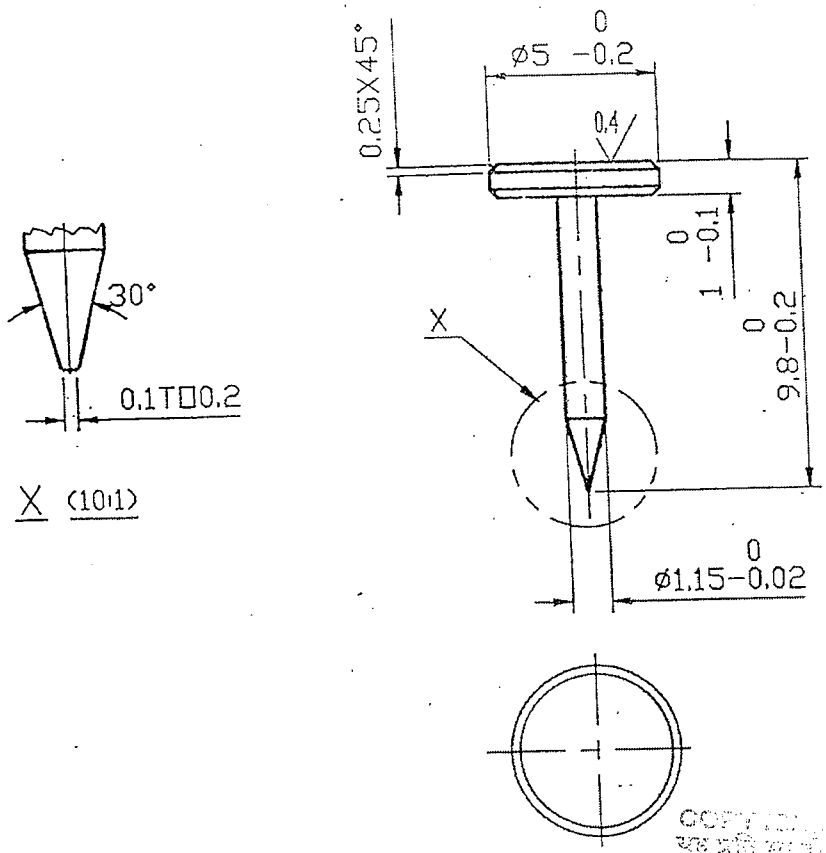

NOTES:

1) DIMNS. APPLY AFTER PLATING.

2) BURRS/SHARP EDGES NOT PERMITTED.

COPY [illegible] हार की गई है [illegible]
दिनांक: [illegible]
Date: 14-05-79 for [illegible]

R No.	DATE	AUTHORITY	BRIEF RECORD	ZONE	CD	GD
					SIGN	

DRN. SABLE | CHD.

APPD. DATE: 15/6/98 FOR DIRECTOR

SEALED DATE:

SCALE: 5:1 | EST.MASS: 0.2 g

DESIGN AUTHORITY ARDE

MATERIAL: STEEL TO SPEC. IS:2073-1962 C40 OR BS 970 Pt.I Gd.080 M40 IN COLD DRAWN CONDITION

PROTECTIVE FINISH: TO BE NICKEL PLATED TO SERVICE Gd.No.3 TO SPEC. IS:1068-1985. OR ELECTROLESS NICKEL PLATING WITH BOND STRENGHT MIN.2800 Kg/Cm^2

TITLE: STRIKER

DRG.No. 9 1 0 2 (IC) 0 0 (SS) 0 3 (S) 0 4 (AA) 1 1 (A) 0 0 (C) 4 0 0 (SST) D A

PART No. | DS CAT No. | AHSP

GEN.TOL.MEDIUM/~~COARSE/FINE~~ CLASS TO IS:2102	DRAWING CONVENTION CONFORM TO INDIAN STD. DIMNS IN mm UNLESS OTHERWISE STATED.

DRG.No. 9 1 0 2 (IC) 0 0 (SS) 0 3 (S) 0 4 (AA) 1 1 (A) 0 0 5 (C) 0 0 D A (SST)

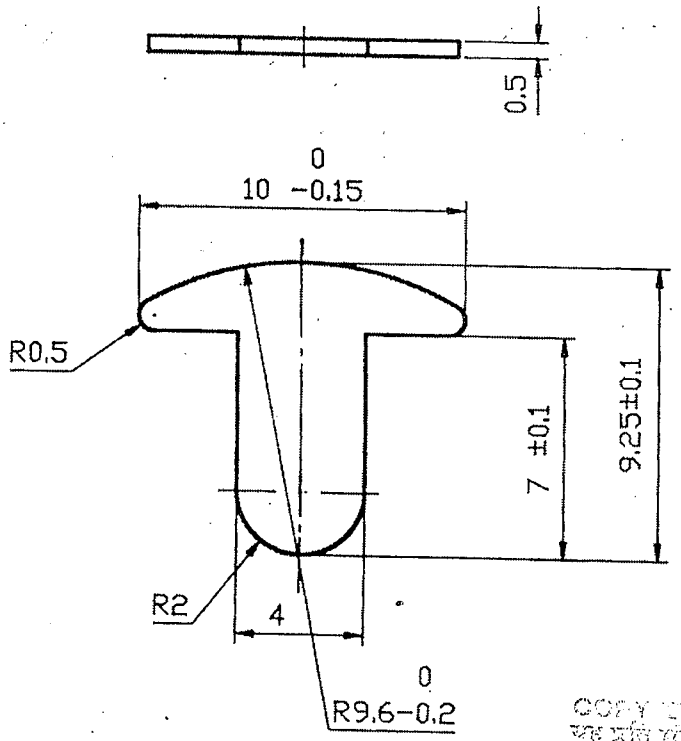

NOTES:

1) DIMNS. APPLY AFTER PLATING
2) HARDNESS 450±25 VPN /10 Kg.
3) BURRS/SHARP EDGES NOT PERMITTED.

COPY ... Date: 14-05-19

R No.	DATE	AUTHORITY	BRIEF RECORD	ZONE	CD	GD
					SIGN	

DRN. SABLE	CHD.	MATERIAL: STEEL TO SPEC. BS 970 En 42 G
APPD. DATE: 15/6/98	FOR DIRECTOR	PROTECTIVE FINISH: TO BE NICKEL PLATED TO SERVICE Gd.No.3 TO SPEC. IS:1068-1985. OR ELECTROLESS NICKEL PLATING WITH BOND STRENGHT MIN.2800 Kg/Cm²
SEALED DATE:		
SCALE: 5:1	EST.MASS: 0.18 g	TITLE: STRIP STRIKER
DESIGN AUTHORITY ARDE		
DRG.No.	9 1 0 2 (IC) 0 0 (SS) 0 3 (S) 0 4 (AA) 1 1 (A) 0 0 5 (C) 0 0 D A (SST)	
PART No.	DS CAT No.	AHSP